Service Manual

Digital Power Amplifier

DPA-300T/300Q

interM

CONTENTS

Specifications 1
Electrical Parts List 2
Top and Bottom View of P.C. Board 20
Block Diagram 32
Schematic Diagram 34
Wiring Diagram 52
Exploded View of Cabinet & Chassis / Mechanical Parts List 54

SPECIFICATIONS

		DPA-300T	DPA-300Q
Rated Output Power (THD 0.1%, AES17)		300W x 3	300W x 4
Peak Power		350W/CH	
Output Level/Impedance		100V/33.3Ω	
		70V/16.3Ω	
		49V/8Ω	
Input Sensitivity		1V/10kΩ	
T H D (AES17)	Rated Power	Less than 0.1%	
	1/3 Power	Less than 0.03%	
S/N (20kHz LPF)		More than 103dB	
Frequency Response (1W, ±3dB)		50Hz~20kHz	
Operating Temperature		-10°C ~ +40°C	
Operating Power		120VAC, 60Hz, 220-240VAC, 50/60Hz DC 24V	
Power Consumption (1/8 Power)		250W	
Weight (SET)		8.2kg/18.1lb	8.4kg/18.5lb
Dimensions (SET)		482(W) x 88(H) x 450(D)mm / 19(W) x 3.5(H) x 17.7(D)in	

* Design and specification are subject to be changed for the improvement of product quality without pre notice.

ELECTRICAL PARTS LIST

REF	ITEM NO.	DEFINE	VALUE
DPA-300T AMP			
R170-172 R379-381 R581	104234	"R10J/A,10"	10
R327-328 R427-428 R527-528	104347	"R56KJ/A,56K"	56K
R337-338 R437-438 R537-538	104454	"R10J/1W/MF/T,10 1W"	10 1W
R367-368	104673	"R56J/2W/MO/T,56 2W"	56 2W
R374-375 R474-475 R574-575	104745	"R25J/5W/CE,25"	25
C313-314 C413-414 C513-514	105404	"EC10U35M/WB/T,10/35"	10/35
"C112-113 C118-119 C139-140 C212-213 C218-219 C315 C342 C346-347 C415 C515"	105508	"EC47U25M/RG/T,47/25"	47/25
C321	105511	"EC47U50M/SG/T,47/50"	47/50
C340-341 C343-344 C362-363	105585	"EC470U100M/NXB,470/100"	470/100
C325-326 C425-426 C525-526	105857	"MA0.033U100J/T,0.033/100(M)"	0.033/100(M)
C323-324 C423-424 C523-524	105909	"MA0.1U250J/DEM/T,0.1/250(M)"	0.1/250(M)
C316-317 C416-417 C516-517	105910	"MA0.1U250K/DEM/T,0.1/250(M)"	0.1/250(M)
C390-391 C490-491 C590-591	105919	"MA0.068U250J/DEM/T,0.068/250(M)"	0.068/250(M)
C303-306 C403-406 C503-506	105929	"MA2200P50M/MKS/T,2200P50(M)"	2200P50(M)
"TP106 TP111 TP206 TP211 TP305-307 TP310 TP405-406 TP505-506 TP509 TP612"	106871	"TP/TP00325-21/T,TP00325-21"	TP00325-21
CN2	110495	"05P/B5P-VH/3.96/110495,B05PVH-05P"	B05PVH-05P
CP1 CP3-5	111330	"02P/53014/2,53014-02P"	53014-02P
CN301	111358	"03P/LW-5267/2.5,LW5267-03P"	LW5267-03P
CN1	111360	"05P/LW-5267/2.5,LW5267-05P"	LW5267-05P
CN901	111365	"10P/LW-5267/2.5,LW5267-10P"	LW5267-10P
CN101 CN201	111371	"16P/LW-5267/2.5,LW5267-16P"	LW5267-16P
"AN1N1-2 AN1P1-2 AN2N1-2 AN2P1-2 AN3N1-2 AN3P1-2 AN4N1-2 AN4P1-2"	111903	"TER/250/01V/111903,250T"	250T
SW301	112022	"SL/JSS-2208A,JSS-2208A"	JSS-2208A
Q311	118627	"PNP/KRA303/USM,KRA303"	KRA303
"Q104-105 Q109-110 Q204-205 Q315 Q317 Q330 Q415 Q417 Q430 Q515 Q517 Q530 Q902 Q906 Q910 Q914"	118638	"NPN/KRC403/USM,KRC403"	KRC403
Q301	118643	"NPN/KTC4375-Y/SOT89,KTC4375-Y"	KTC4375-Y
Q313	118657	"PNP/KTA1666/SOT89,KTA1666"	KTA1666
"Q314 Q316 Q319 Q414 Q416 Q419 Q514 Q516 Q519"	118663	"PNP/2N3906S/SOT23,2N3906S"	2N3906S
"Q101-102 Q106-107			

ELECTRICAL PARTS LIST

REF	ITEM NO.	DEFINE	VALUE
Q201-202 Q206-207 Q308 Q310 Q312 Q318 Q408 Q410 Q508 Q510"	118672	"NPN/2N3904/SOT23,2N3904"	2N3904
IC302	118724	"7805/KIA/D-PAK,7805"	7805
IC101-106 IC201-203 IC205	118730	"NJM072M/DMP08P,NJM072M"	NJM072M
IC602	118926	"74HC00/SOP14P,74HC00"	74HC00
"D1 D103-104 D106 D109-110 D112-114 D203-204 D206 D209-210 D213 D304 D311-312 D314 D319 D404 D414 D504 D514 D901-904"	119190	"D/BAS21/SOT23,BAS21"	BAS21
"D101-102 D105 D107-108 D111 D201-202 D205 D207-208"	119196	"D/BAV99/SOT23,BAV99"	BAV99
"D305-308 D315-318 D405-408 D415-418 D505-508 D515-518"	119203	"D/MURS120T3/DO214AA,MURS120T3"	MURS120T3
LD101 LD304	119236	"LD/G/1608S/LTST-C190TGKT,LTST-C190TGKT"	LTST-C190TGKT
R333-336 R433-436 R533-536	119346	"R10J/2012,10"	10
"R315-316 R341 R356 R415-416 R441 R515-516 R541 R556"	119353	"R100J/2012,100"	100
"R122 R126 R148 R152 R222 R226 R301-302 R348 R372 R378 R401-402 R448 R472 R501-502 R548 R572"	119362	"R1KJ/2012,1K"	1K
"R105-106 R114-117 R132-133 R141-144 R205-206 R214-217 R232-233 R325-326 R384 R395 R397 R425-426 R497 R525-526 R597 R651-653 R905-906 R912-913 R919-920 R926-927"	119367	"R10KJ/2012,10K"	10K
"R118 R123 R145 R149 R155-158 R218 R223 R255-256 R907 R914 R921 R928"	119370	"R100KJ/2012,100K"	100K
R159-160 R259-260	119401	"R12KJ/2012,12K"	12K
R369-370 R469-470 R569-570	119405	"R120KJ/2012,120K"	120K
R313-314 R413-414 R513-514	119420	"R150J/2012,150"	150
R903 R910 R917 R924	119435	"R150KJ/2012,150K"	150K

ELECTRICAL PARTS LIST

REF	ITEM NO.	DEFINE	VALUE
"R101-102 R128-129 R201-202 R228-229"	119455	"R1.8KJ/2012,1.8K"	1.8K
R121 R147 R221	119466	"R180KJ/2012,180K"	180K
"R109 R111 R136 R138 R209 R211 R236 R238"	119473	"R2KJ/2012,2K"	2K
"R108 R110 R135 R137 R208 R210 R235 R237 R902 R909 R916 R923"	119499	"R22KJ/2012,22K"	22K
R396	119502	"R220KJ/2012,220K"	220K
"R303-304 R394 R403-404 R503-504"	119548	"R3KJ/2012,3K"	3K
R342 R366 R442 R542	119576	"R3.3KJ/2012,3.3K"	3.3K
R113 R140 R213	119580	"R33KJ/2012,33K"	33K
"R154 R323-324 R423-424 R523-524"	119590	"R3.6KJ/2012,3.6K"	3.6K
"R107 R125 R134 R151 R207 R225 R234 R346 R446 R546 R901 R908 R915 R922"	119605	"R3.9KJ/2012,3.9K"	3.9K
R390 R490 R590	119617	"R47J/2012,47"	47
"R364 R385 R387 R392 R485 R487 R492 R585 R587 R592"	119625	"R4.7KJ/2012,4.7K"	4.7K
"R120 R127 R146 R153 R220 R227 R309-310 R365 R386 R388 R393 R409-410 R486 R488 R493 R509-510 R586 R588 R593"	119630	"R47KJ/2012,47K"	47K
R904 R911 R918 R925	119635	"R470KJ/2012,470K"	470K
"R329-332 R382-383 R429-432 R482-483 R529-532 R582-583"	119645	"R4.7J/2012,4.7"	4.7
"R311-312 R340 R343 R350 R411-412 R440 R443 R450 R511-512 R540 R543 R550"	119670	"R560J/2012,560"	560
"R321-322 R347 R371 R421-422 R447 R471 R521-522 R547 R571"	119707	"R6.8KJ/2012,6.8K"	6.8K
"R6 R103-104 R124 R130-131 R150 R203-204 R224 R230-231 R344-345 R444-445 R544-545"	119747	"R8.2KJ/2012,8.2K"	8.2K
R112 R139 R212	119949	"R4.3KJ/2012,4.3K"	4.3K
C319	120237	"CE0.001U50J/3216,0.001U"	0.001U
C126 C339	120247	"CE0.1U50Z/2012,0.1U"	0.1U
"C115 C127-128 C142 C151-152 C215 C227-228 C330-331			

ELECTRICAL PARTS LIST

REF	ITEM NO.	DEFINE	VALUE
C430-431 C530-531"	120251	"CE1U50Z/2012,1U"	1U
"C117 C144 C217			
C328-329 C345 C369			
C428-429 C528-529"	120348	"CE4.7U16M/3216,4.7/16"	4.7/16
C116 C143 C216	120349	"CE10P50J/1608,10P"	10P
"C104-105 C108			
C131-132 C135			
C153-154 C204-205			
C208 C231-232 C235			
C253-254 C672"	120352	"CE100P50J/2012,100P"	100P
"C102-103 C129-130			
C202-203 C229-230"	120381	"CE330P50J/2012,330P"	330P
C110-111 C137-138			
C210-211	120389	"CE47P50J/2012,47P"	47P
"C107 C134 C207			
C234 C301-302			
C401-402 C501-502"	120391	"CE470P50J/2012,470P"	470P
"C114 C120-125 C141			
C145-150 C214			
C220-225 C245-250			
C318 C320 C332			
C348-351 C370-371			
C470-471 C518 C532			
C570-571			
C670-671 C673"	120421	"CE0.1U50K/2012,0.1U"	0.1U
"FB1-2 FB301-302			
FB401-402			
FB501-502 FB601-602"	123776	"80OHM/BEAD/123776,80OHM"	80OHM
"C337-338 C352			
C355-356			
C360-361 C552"	126494	"CE0.01U250K/2012,0.01U"	0.01U
C307-308 C407-408			
C507-508	126495	"CE0.001U250J/2012,0.001U"	0.001U
C327 C427 C527	127071	"EC22U50M/NP/T,22/50 NP"	22/50 NP
D310	127303	"ZD/15V/Z02W/SOT23,15V"	15V
FB3	127462	"120OHM/BEAD/127462,120ohm"	120ohm
IC305 IC505	128200	"LM26CIM5-TPA/SOT23-5,LM26CIM5-TPA"	LM26CIM5-TPA
R319-320 R419-420			
R519-520	129502	"R2.4KJ/3216,2.4K"	2.4K
"Q103 Q108 Q203 Q901			
Q904-905 Q908-909			
Q912-913 Q916"	129509	"N/PMBFJ112/SOT23,PMBFJ112"	PMBFJ112
C367 C567	129534	"CE0.01U250J/3216,0.01U250"	0.01U250
IC303	129536	"79L05F/KIA/SOT89,KIA79L05F"	KIA79L05F
R376-377 R476-477			
R576-577	129577	"R4.7KJ/2W/MF/T,4.7K 2W"	4.7K 2W
LD302 LD402 LD502	129968	"LD/R/1608/BL-HUE36A,BL-HUE36A"	BL-HUE36A
LD301 LD401 LD501	130293	"LD/Y/1608/BL-HKB36A,BL-HKB36A"	BL-HKB36A
IC301 IC401 IC501	131763	"IRS2052MPBF/QFN48P/2,IRS2052MPBF"	IRS2052MPBF
CON101	132911	"TER/BL/VL121151/12H/132911,TERMINAL06P"	TERMINAL06P
CON301	132913	"TER/BL/VL085251/08H/132913,TERMINAL04P"	TERMINAL04P
"Q304 Q307 Q404			
Q407 Q504 Q507"	133058	"N/IRFI4020H/TO220-5,IRFI4020H"	IRFI4020H
C109 C136 C209 C236	133535	"MA0.18U50J/ECQV/T,0.18/50(M)"	0.18/50(M)
IC304 IC504	133640	"LM26CIM5-PHA/SOT23-5,LM26CIM5-PHA"	LM26CIM5-PHA
L301-302 L401-402			
L501-502	2001370	"47UH/37/2001370,47uH"	47uH

ELECTRICAL PARTS LIST

REF	ITEM NO.	DEFINE	VALUE
H4 H6	2001390	"HS/2001390/67,Heat sink"	Heat sink
DPA-300T FRONT			
IC902	103384	"PC/LTV847,LTV847"	LTV847
VR901	104992	"203A/09/RK09S1110011,20KA"	20KA
VR1-3	105055	"203A/09/RK09K11N0005,20KA"	20KA
CN1002	111360	"05P/LW-5267/2.5,LW5267-05P"	LW5267-05P
AN901	111365	"10P/LW-5267/2.5,LW5267-10P"	LW5267-10P
AN101 AN201	111371	"16P/LW-5267/2.5,LW5267-16P"	LW5267-16P
SW1	112178	"PW/SDDL1PASL051,SDDL1PASL051"	SDDL1PASL051
BK1-2	113528	"BK/113528,Bracket"	Bracket
LIM101-103	114982	"LIMITER/5.5/11.5/114982,11.5mm"	11.5mm
LIM1-12	114983	"LIMITER/5.5/14.7/114983,14.7mm"	14.7mm
LIM107	114985	"LIMITER/5.5/8/114985,8mm"	8mm
Q1-6 Q13-21 Q25-27			
Q901-904 Q1001-1002	118663	"PNP/2N3906S/SOT23,2N3906S"	2N3906S
Q9-11	118672	"NPN/2N3904/SOT23,2N3904"	2N3904
IC1-3 IC901	118730	"NJM072M/DMP08P,NJM072M"	NJM072M
D5-10	119190	"D/BAS21/SOT23,BAS21"	BAS21
D1-3 D901-906			
D1001-1003	119196	"D/BAV99/SOT23,BAV99"	BAV99
R21-23 R907	119362	"R1KJ/2012,1K"	1K
R13-15	119366	"R10KJ/1608,10K"	10K
R49-51 R905-906	119367	"R10KJ/2012,10K"	10K
R37-39 R1001	119393	"R120J/2012,120"	120
R9-11 R33-35 R910	119401	"R12KJ/2012,12K"	12K
R901-902	119455	"R1.8KJ/2012,1.8K"	1.8K
R1003 R1006	119495	"R2.2KF/3216,2.2K 1%"	2.2K 1%
R5-7 R41-43 R1002	119499	"R22KJ/2012,22K"	22K
R911-914	119527	"R2.7KJ/2012,2.7K"	2.7K
R915-918	119548	"R3KJ/2012,3K"	3K
R1-3 R25-27 R908	119580	"R33KJ/2012,33K"	33K
R29-31 R909	119605	"R3.9KJ/2012,3.9K"	3.9K
R1004	119620	"R470J/2012,470"	470
R919 R921 R923 R925	119625	"R4.7KJ/2012,4.7K"	4.7K
R45-47 R920 R922			
R924 R926	119630	"R47KJ/2012,47K"	47K
R17-19	119711	"R68KJ/2012,68K"	68K
R54 R903-904	119747	"R8.2KJ/2012,8.2K"	8.2K
C1-3	120348	"CE4.7U16M/3216,4.7/16"	4.7/16
C13-15 C903-904 C908	120352	"CE100P50J/2012,100P"	100P
C901-902	120381	"CE330P50J/2012,330P"	330P
C9-11 C907	120391	"CE470P50J/2012,470P"	470P
C17-22 C25-27			
C909-910 C1001	120421	"CE0.1U50K/2012,0.1U"	0.1U
LD1004	126148	"LD/B/3T/SLB1381N-UZ,SLB1381N-UZ"	SLB1381N-UZ
C911	126494	"CE0.01U250K/2012,0.01U"	0.01U
C905	127554	"EC2.2U50M/NXB/T,2.2/50"	2.2/50
LD1 LD5 LD9	129892	"LD/R/3T/BL-B4541,BL-B4541"	BL-B4541
LD2 LD6 LD10 LD1002	130016	"LD/Y/3T/BL-3141-AA-AV,BL-3141-AA-AV"	BL-3141-AA-AV
LD3-4 LD7-8 LD11-12			
LD1001 LD1003	130018	"LD/G/3.1T/BL-B2141,BL-B2141-AA-AV-T05"	BL-B2141-AA-AV-T05
CON901	130135	"TER/OQ0812510000G/08H/130135,TERMINAL08P"	TERMINAL08P
LD901-904	130293	"LD/Y/1608/BL-HKB36A,BL-HKB36A"	BL-HKB36A
AN1002 CN1001	133349	"05P/ASSY/2.5/133349,ASS'Y-05P"	ASS'Y-05P
C5-7 C906	133535	"MA0.18U63J/CEM/T,0.18/63(M)"	0.18/63(M)

ELECTRICAL PARTS LIST

REF	ITEM NO.	DEFINE	VALUE
DPA-300T SMPS			
U3	103061	"7812/KIA,7812"	7812
VAR1-2	103422	"ZNR/361/INR14D361,360V"	360V
R57	104453	"R750KJ/1/2W/MF/A,750K 1/2W"	750K 1/2W
R3 R5 R128-129	104518	"R10J/2W/MO/T,10 2W"	10 2W
R77 R115	104537	"R10KJ/2W/MO/T,10K 2W"	10K 2W
C62 C66 C68	105351	"EC220U50M/RD,220/50"	220/50
C16 C23	105421	"EC100U25M/RG/T,100/25"	100/25
C4 C8 C18 C55 C82			
C89 C92	105462	"EC22U25M/RG/T,22/25"	22/25
C90	105463	"EC22U50M/SHL/T,22/50"	22/50
C203 C206	105508	"EC47U25M/RG/T,47/25"	47/25
C25	105548	"EC4.7U50M/RG/T,4.7/50"	4.7/50
C11-12 C42 C51	105625	"EC2200U35M/RD,2200/35"	2200/35
C35 C202	105793	"CE2200P250M/AC,2200P250"	2200P250
C455-456	105909	"MA0.1U250J/DEM/T,0.1/250(M)"	0.1/250(M)
TP1-12 TP15 TP20			
TP201 TP209	106871	"TP/TP00325-21/T,TP00325-21"	TP00325-21
CN5	110495	"05P/B5P-VH/3.96/110495,B05PVH-05P"	B05PVH-05P
CN4	110850	"TER/BL/010/02H/110850,TERMINAL02P"	TERMINAL02P
CN1-3	111360	"05P/LW-5267/2.5,LW5267-05P"	LW5267-05P
F3	111579	"FUSE/GF-205B,GF-205B"	GF-205B
JK1	111737	"ACIN/SS-7B-1-09,AC IN"	AC IN
TER1-2	111903	"TER/250/01V/111903,250T"	250T
HS1	114265	"HS/114265/30,Heat sink"	Heat sink
Q13	118627	"PNP/KRA303/USM,KRA303"	KRA303
Q25	118638	"NPN/KRC403/USM,KRC403"	KRC403
Q6	118657	"PNP/KTA1666/SOT89,KTA1666"	KTA1666
Q26	118663	"PNP/2N3906S/SOT23,2N3906S"	2N3906S
PC1 PC3-6 PC8			
PC10-11 PC16	118872	"PC/LTV817B,LTV817B"	LTV817B
D1 D10 D16 D20			
D45-46	119171	"D/1N4148/SOT23,1N4148"	1N4148
D205	119202	"D/MURS160T3/DO214AA,MURS160T3"	MURS160T3
D204	119210	"ZD/10V/BZX84C/SOT23,10V"	10V
R95	119344	"R3J/3216,3"	3
R2 R13 R176-177 R207	119346	"R10J/2012,10"	10
R63-64	119348	"R10J/3216,10"	10
R21 R23 R28 R32 R69			
R88	119362	"R1KJ/2012,1K"	1K
"R6 R27 R47 R51 R56			
R67 R70 R73-74 R84			
R86 R92 R100 R108			
R136 R154 R161 R180			
R403 R405"	119367	"R10KJ/2012,10K"	10K
R83 R117 R121	119370	"R100KJ/2012,100K"	100K
R78	119373	"R1MJ/2012,1M"	1M
R201-202	119374	"R1MJ/3216,1M"	1M
R48 R61 R155-156	119388	"R12J/2012,12"	12
R52 R107 R462	119396	"R1.2KJ/2012,1.2K"	1.2K
R15 R25 R79 R153	119401	"R12KJ/2012,12K"	12K
R62 R112	119405	"R120KJ/2012,120K"	120K
R111 R463	119408	"R1.3KF/2012,1.3K 1%"	1.3K 1%
R50	119408	"R1.3KJ/2012,1.3K"	1.3K
R43 R55 R131	119428	"R15KJ/2012,15K"	15K
R140	119436	"R150KJ/3216,150K"	150K
R54	119466	"R180KJ/2012,180K"	180K

ELECTRICAL PARTS LIST

REF	ITEM NO.	DEFINE	VALUE
R59-60 R85 R114 R152 R159 R490	119473	"R2KJ/2012,2K"	2K
R42	119476	"R20KJ/2012,20K"	20K
R205	119487	"R22J/2012,22"	22
R149	119492	"R220J/2012,220"	220
R4 R82 R96 R101-102	119497	"R2.2KJ/2012,2.2K"	2.2K
R158	119548	"R3KJ/2012,3K"	3K
R10 R29 R110 R123	119576	"R3.3KJ/2012,3.3K"	3.3K
R1	119580	"R33KJ/2012,33K"	33K
R33-34	119581	"R33KJ/3216,33K"	33K
R44	119586	"R330KJ/2012,330K"	330K
R87 R109	119608	"R39KJ/2012,39K"	39K
R53	119620	"R470J/2012,470"	470
R116 R469	119625	"R4.7KJ/2012,4.7K"	4.7K
R7-8 R126-127 R137 R162	119630	"R47KJ/2012,47K"	47K
"R18-20 R40 R113 R118-120 R138-139 R203-204"	119631	"R47KJ/3216,47K"	47K
R144-145	119636	"R470KJ/3216,470K"	470K
R68 R106 R130 R172	119655	"R5.1KJ/2012,5.1K"	5.1K
R36 R72 R206	119670	"R560J/2012,560"	560
R105 R461	119689	"R6.2KJ/2012,6.2K"	6.2K
R11 R26	119701	"R680J/2012,680"	680
R39	119727	"R750J/2012,750"	750
R104	119732	"R7.5KJ/2012,7.5K"	7.5K
R103	119822	"R68KF/3216,68K 1%"	68K 1%
R37	119823	"R75KF/2012,75K 1%"	75K 1%
R30 R46 R94	119934	"R3J/3216,3"	3
R71 R97-99 R402 R404	119955	"R51J/2012,51"	51
R12 R14 R76 R80 R91 R178-179	120063	"R0J/3216,0"	0
C457	120235	"CE0.001U50J/2012,0.001U"	0.001U
C79 C100	120245	"CE0.1U50K/3216,0.1U"	0.1U
"C5-6 C10 C21 C30 C32 C49 C71 C75 C83 C86 C96 C111 C115"	120251	"CE1U50Z/2012,1U"	1U
C33 C36 C109 C118	120275	"CE2200P50K/2012,2200P"	2200P
C27 C64 C114 C451	120315	"CE0.47U50Z/2012,0.47U"	0.47U
C205	120348	"CE4.7U16M/3216,4.7/16"	4.7/16
C19	120363	"CE180P50J/2012,180P"	180P
C22	120417	"CE0.01U50K/2012,0.01U"	0.01U
"C7 C9 C17 C20 C24 C31 C39 C45 C52 C54 C57 C65 C67 C69 C76 C84 C87 C91 C93-94 C99 C110 C117 C204 C207 C220"	120421	"CE0.1U50K/2012,0.1U"	0.1U
C70 C490	120431	"CE0.022U50K/2012,0.022U"	0.022U
ZD7	122227	"ZD/UZ5.1V/0.2W/USC,5.1V 0.2W"	5.1V 0.2W
Q5 Q8	124670	"NPN/MMBT2222/SOT23,MMBT2222"	MMBT2222
D6 D9 D14 D18 D31	125194	"D/SF20LC30,SF20LC30"	SF20LC30
CX1 CX3-4	125195	"MA0.47U275M/AC,0.47/275(M)"	0.47/275(M)
C44 C59 C128 C133	125212	"CE0.1U100K/3216,0.1U100"	0.1U100
D4 D17 D24	125709	"D/SF20LC30,SFF1606G"	SFF1606G
D5 D41	125709	"D/SFF1606G,SFF1606G"	SFF1606G

ELECTRICAL PARTS LIST

REF	ITEM NO.	DEFINE	VALUE
C77 C97	125719	"CE0.001U1KK/Y5P/T,0.001/1K"	0.001/1K
C104-105	125720	"CE2200P400M/SD,2200P"	2200P
U1 U6 U9-10 U15 U401	125843	"KIA431AF/SOT89,KIA431AF"	KIA431AF
C34	125848	"EC100U50M/NXB/T,100/50"	100/50
C48 C454	125849	"EC220U100M/NXA,220/100"	220/100
D42	125856	"ZD/MMSZ5254B/SOD123,MMSZ5254B-27V"	MMSZ5254B-27V
BD1	125866	"BD/TS15P05G,TS15P05G"	TS15P05G
RLY3-4	125868	"24V/881H-1AH-C/S2L1/2,24V"	24V
R142	125872	"R200KJ/3216,200K"	200K
"D12 D32 D35 D37-38 D40 D47-48"	125880	"SD/SS16/SMA,SS16"	SS16
L4-5	125913	"2.8UH/LINE/125913,2.8UH"	2.8UH
R24	126498	"R2.7KF/2012,2.7K 1%"	2.7K 1%
BD2-3 BD6	127462	"120OHM/BEAD/127462,120ohm"	120ohm
C85 C120	127711	"EC10U50M/NXB/T,10/50"	10/50
IC203	128200	"LM26CIM5-TPA/SOT23-5,LM26CIM5-TPA"	LM26CIM5-TPA
F1-2	128336	"FUSE/178.6165,178.6165"	178.6165
U5	128383	"78R15/KIA/API,78R15"	78R15
C38	129356	"CE10U6.3K/2012,10U6.3"	10U6.3
D7	129532	"D/ES3G/DO214AB,ES3G"	ES3G
U18	129542	"NJM2403M/DMP08P,NJM2403M"	NJM2403M
C98 C126-127 C402	130523	"CE220P1KK/Y5R,220P1K"	220P1K
R75 R89	130591	"R0K/3216,0 10%"	0 10%
IC201	132173	"TOP242PN/2,TOP242PN"	TOP242PN
U11	132334	"UCC27324D/SOIC08P/2,UCC27324D"	UCC27324D
U12 U14	132336	"IR2113/SOIC16P/2,IR2113"	IR2113
U7-8	132340	"UCC25600/SOIC08P/2,UCC25600"	UCC25600
BK4	132373	"BK/132373,Bracket"	Bracket
BK1 BK3	132374	"BK/132374,Bracket"	Bracket
C46 C56	132383	"EC2700U200M/TLS,2700/200"	2700/200
"D2-3 D8 D11 D19 D22-23 D25-30 D33-34 D36 D39 D44"	132384	"SD/US1M/SMA,US1M"	US1M
R16-17 R134-135	132392	"R1.8MJ/3216,1.8M"	1.8M
R459	132483	"R27KJ/3216,27K"	27K
ZD1-6 ZD8 ZD11	132803	"ZD/18V/MMBZ5248B/SOT23,18V"	18V
C201	132816	"EC10U450M/NFC,10/450"	10/450
T5	132819	"T/132819,132819"	132819
R65 R81 R90 R93	132827	"R6.8J/3216,6.8"	6.8
U17	132828	"MIC2778-2BM5/SOT23-5,MIC2778-2BM5"	MIC2778-2BM5
Q4 Q7 Q10 Q16 Q21-22	132830	"NPN/BCP68/SOT223,BCP68"	BCP68
Q1 Q9 Q15 Q17-18 Q410	132831	"PNP/BCP69/SOT223,BCP69"	BCP69
R143	132845	"R680KJ/3216,680K"	680K
R41	132849	"R240KJ/3216,240K"	240K
T4	132857	"PT/132857/220V,132857"	132857
C1-3 C15 C47 C50	132860	"MA0.022U630J/MP,0.022/630(M)"	0.022/630(M)
C29 C40	132883	"MA2.2U250J/MP,2.2/250(M)"	2.2/250(M)
R58	132898	"R62KF/2012,62K 1%"	62K 1%
R146	132932	"R430KJ/3216,430K"	430K
H7	132986	"HS/132986/55,Heat sink"	Heat sink
H5 H8 HS4	132989	"HS/132989/55,Heat sink"	Heat sink
Q11 Q19-20 Q401	133112	"N/IPP60R099C6/TO220,IPP60R099C6"	IPP60R099C6
U4	133312	"UCC28220D/SOIC16P/2,UCC28220D"	UCC28220D
L2 L7	133348	"TS/133348,133348"	133348
L3 L6	133364	"PT/133364/311V,133364"	133364

ELECTRICAL PARTS LIST

REF	ITEM NO.	DEFINE	VALUE
L1	133365	"PT/133365/311V,133365"	133365
HS32	133374	"HS/133374/55,Heat sink"	Heat sink
Q12 Q14 Q23-24	133414	"N/IRFB4127PBF/TO220,IRFB4127PBF"	IRFB4127PBF
C14	133441	"MA/10U300K/MKP,10/300(M)"	10/300(M)
C13 C28 C37 C43	133532	"MA0.1U630KJ/MP,0.1/630(M)"	0.1/630(M)
HS2	133547	"HS/133547/55,Heat sink"	Heat sink
TH1	133656	"20/MJ/8A/194T/MS32-20008,20 ohm"	20 ohm
DPA-300T WIRING			
	113303	"FAN BKT ""R"""	
	113302	"FAN BKT ""L"""	
	133175	"FUSE,0215015.MXP"	FUSE
	114182	DC FAN(3110KL-05W-B70-F04)	MOTOR/FAN
	133089	"TERMNAL BLOCK,2P,BI-16PTHC-02P "	CONNECTOR
			WAFER/TERMINAL
	133388	"CON ASS'Y,FL,5P,5264,5264,AWG26,250mm"	CONNECTOR ASS'Y
	133389	"CON ASS'Y,FL,16P,5264,5264,AWG26,430mm"	CONNECTOR ASS'Y
	133390	"CON ASS'Y,DS,5P,5239,5239,AWG18,150mm"	CONNECTOR ASS'Y
	133391	"CON ASS'Y,FL,10P,5264,5264,AWG26,150mm"	CONNECTOR ASS'Y
	109889	"CON ASS'Y,DS,1P,250T08,250T08,80MM"	CONNECTOR ASS'Y
DPA-300Q AMP			
"AN1N1-2 AN1P1-2 AN2N1-2 AN2P1-2 AN3N1-2 AN3P1-2 AN4N1-2 AN4P1-2"	111903	"TER/250/01V/111903,250T"	250T
"C102-103 C129-130 C202-203 C229-230"	120381	"CE330P50J/2012,330P"	330P
"C104-105 C108 C131-132 C135 C153-154 C204-205 C208 C231-232 C235 C253-254 C672"	120352	"CE100P50J/2012,100P"	100P
"C107 C134 C207 C234 C301-302 C401-402 C501-502 C601-602"	120391	"CE470P50J/2012,470P"	470P
C109 C136 C209 C236	133535	"MA0.18U50J/ECQV/T,0.18/50(M)"	0.18/50(M)
"C110-111 C137-138 C210-211 C237-238"	120389	"CE47P50J/2012,47P"	47P
"C112-113 C118-119 C139-140 C212-213 C218-219 C239-240 C315 C342 C346-347 C415 C515 C615"	105508	"EC47U25M/RG/T,47/25"	47/25
"C114 C120-125 C141 C145-150 C214 C220-225 C241 C245-250 C318 C320 C332 C348-351 C370-371 C470-471 C518 C532 C570-571 C670-671 C673"	120421	"CE0.1U50K/2012,0.1U"	0.1U
"C115 C127-128 C142 C151-152 C215 C227-228 C242 C251-252 C330-331 C430-431 C530-531			

ELECTRICAL PARTS LIST

REF	ITEM NO.	DEFINE	VALUE
C630-631"	120251	"CE1U50Z/2012,1U"	1U
C116 C143 C216 C243	120349	"CE10P50J/1608,10P"	10P
"C117 C144 C217 C244			
C328-329 C345 C369			
C428-429 C528-529			
C628-629"	120348	"CE4.7U16M/3216,4.7/16"	4.7/16
C126 C339	120247	"CE0.1U50Z/2012,0.1U"	0.1U
"C303-306 C403-406			
C503-506 C603-606"	105929	"MA2200P50M/MKS/T,2200P50(M)"	2200P50(M)
"C307-308 C407-408			
C507-508 C607-608"	126495	"CE0.001U250J/2012,0.001U"	0.001U
"C313-314 C413-414			
C513-514 C613-614"	105404	"EC10U35M/WB/T,10/35"	10/35
"C316-317 C416-417			
C516-517 C616-617"	105910	"MA0.1U250K/DEM/T,0.1/250(M)"	0.1/250(M)
C319	120237	"CE0.001U50J/3216,0.001U"	0.001U
C321	105511	"EC47U50M/SG/T,47/50"	47/50
"C323-324 C423-424			
C523-524 C623-624"	105909	"MA0.1U250J/DEM/T,0.1/250(M)"	0.1/250(M)
"C325-326 C425-426			
C525-526 C625-626"	105857	"MA0.033U100J/T,0.033/100(M)"	0.033/100(M)
C327 C427 C527 C627	127071	"EC22U50M/NP/T,22/50 NP"	22/50 NP
"C337-338 C352			
C355-356 C360-361			
C552"	126494	"CE0.01U250K/2012,0.01U"	0.01U
C340-341 C343-344			
C362-363	105585	"EC470U100M/NXB,470/100"	470/100
C367 C567	129534	"CE0.01U250J/3216,0.01U250"	0.01U250
"C390-391 C490-491			
C590-591 C690-691"	105919	"MA0.068U250J/DEM/T,0.068/250(M)"	0.068/250(M)
CN1	111360	"05P/LW-5267/2.5,LW5267-05P"	LW5267-05P
CN101 CN201	111371	"16P/LW-5267/2.5,LW5267-16P"	LW5267-16P
CN2	110495	"05P/B5P-VH/3.96/110495,B05PVH-05P"	B05PVH-05P
CN301	111358	"03P/LW-5267/2.5,LW5267-03P"	LW5267-03P
CN901	111365	"10P/LW-5267/2.5,LW5267-10P"	LW5267-10P
CON101	132911	"TER/BL/VL121151/12H/132911,TERMINAL06P"	TERMINAL06P
CON301	132913	"TER/BL/VL085251/08H/132913,TERMINAL04P"	TERMINAL04P
CP1-5	111330	"02P/53014/2,53014-02P"	53014-02P
"D1 D103-104 D106			
D109-110 D112-114			
D203-204 D206			
D209-210 D212-214			
D304 D311-312 D314			
D319 D404 D414			
D504 D514 D604 D614			
D901-904"	119190	"D/BAS21/SOT23,BAS21"	BAS21
"D101-102 D105			
D107-108 D111			
D201-202 D205			
D207-208 D211"	119196	"D/BAV99/SOT23,BAV99"	BAV99
"D305-308 D315-318			
D405-408 D415-418			
D505-508 D515-518			
D605-608 D615-618"	119203	"D/MURS120T3/DO214AA,MURS120T3"	MURS120T3
D310	127303	"ZD/15V/Z02W/SOT23,15V"	15V
"FB1-2 FB301-302			
FB401-402 FB501-502			

ELECTRICAL PARTS LIST

REF	ITEM NO.	DEFINE	VALUE
FB601-602"	123776	"80OHM/BEAD/123776,80OHM"	80OHM
FB3	127462	"120OHM/BEAD/127462,120ohm"	120ohm
H4 H6	2001390	"HS/2001390/67,Heat sink"	Heat sink
IC101-106 IC201-206 IC301 IC401 IC501	118730	"NJM072M/DMP08P,NJM072M"	NJM072M
IC601	131763	"IRS2052MPBF/QFN48P/2,IRS2052MPBF"	IRS2052MPBF
IC302	118724	"7805/KIA/D-PAK,7805"	7805
IC303	129536	"79L05F/KIA/SOT89,KIA79L05F"	KIA79L05F
IC304 IC504	133640	"LM26CIM5-PHA/SOT23-5,LM26CIM5-PHA"	LM26CIM5-PHA
IC305 IC505	128200	"LM26CIM5-TPA/SOT23-5,LM26CIM5-TPA"	LM26CIM5-TPA
IC602	118926	"74HC00/SOP14P,74HC00"	74HC00
"L301-302 L401-402 L501-502 L601-602"	2001370	"47UH/37/2001370,47uH"	47uH
LD101 LD304 LD301 LD401 LD501	119236	"LD/G/1608S/LTST-C190TGKT,LTST-C190TGKT"	LTST-C190TGKT
LD601 LD302 LD402 LD502	130293	"LD/Y/1608/BL-HKB36A,BL-HKB36A"	BL-HKB36A
LD602	129968	"LD/R/1608/BL-HUE36A,BL-HUE36A"	BL-HUE36A
"Q101-102 Q106-107 Q201-202 Q206-207 Q308 Q310 Q312 Q318 Q408 Q410 Q508 Q510 Q608 Q610"	118672	"NPN/2N3904/SOT23,2N3904"	2N3904
"Q103 Q108 Q203 Q208 Q901 Q904-905 Q908-909 Q912-913 Q916"	129509	"N/PMBFJ112/SOT23,PMBFJ112"	PMBFJ112
"Q104-105 Q109-110 Q204-205 Q209-210 Q315 Q317 Q330 Q415 Q417 Q430 Q515 Q517 Q530 Q615 Q617 Q630 Q902 Q906 Q910 Q914"	118638	"NPN/KRC403/USM,KRC403"	KRC403
Q301	118643	"NPN/KTC4375-Y/SOT89,KTC4375-Y"	KTC4375-Y
"Q304 Q307 Q404 Q407 Q504 Q507 Q604 Q607"	133058	"N/IRFI4020H/TO220-5,IRFI4020H"	IRFI4020H
Q311	118627	"PNP/KRA303/USM,KRA303"	KRA303
Q313	118657	"PNP/KTA1666/SOT89,KTA1666"	KTA1666
"Q314 Q316 Q319 Q414 Q416 Q419 Q514 Q516 Q519 Q614 Q616 Q619"	118663	"PNP/2N3906S/SOT23,2N3906S"	2N3906S
"R101-102 R128-129 R201-202 R228-229"	119455	"R1.8KJ/2012,1.8K"	1.8K
"R105-106 R114-117 R132-133 R141-144 R205-206 R214-217 R232-233 R241-244 R325-326 R384 R395 R397 R425-426 R497 R525-526 R597 R625-626 R651-653 R697 R905-906 R912-913 R919-920 R926-927"	119367	"R10KJ/2012,10K"	10K
"R107 R125 R134 R151 R207 R225 R234			

ELECTRICAL PARTS LIST

REF	ITEM NO.	DEFINE	VALUE
R251 R346 R446 R546 R646 R901 R908 R915 R922"	119605	"R3.9KJ/2012,3.9K"	3.9K
"R108 R110 R135 R137 R208 R210 R235 R237 R902 R909 R916 R923"	119499	"R22KJ/2012,22K"	22K
"R109 R111 R136 R138 R209 R211 R236 R238"	119473	"R2KJ/2012,2K"	2K
R112 R139 R212 R239	119949	"R4.3KJ/2012,4.3K"	4.3K
R113 R140 R213 R240	119580	"R33KJ/2012,33K"	33K
"R118 R123 R145 R149 R155-158 R218 R223 R245 R249 R255-258 R907 R914 R921 R928"	119370	"R100KJ/2012,100K"	100K
"R120 R127 R146 R153 R220 R227 R246 R253 R309-310 R365 R386 R388 R393 R409-410 R486 R488 R493 R509-510 R586 R588 R593 R609-610 R686 R688 R693"	119630	"R47KJ/2012,47K"	47K
R121 R147 R221 R247	119466	"R180KJ/2012,180K"	180K
"R122 R126 R148 R152 R222 R226 R248 R252 R301-302 R348 R372 R378 R401-402 R448 R472 R501-502 R548 R572 R601-602 R648 R672"	119362	"R1KJ/2012,1K"	1K
"R154 R323-324 R423-424 R523-524 R623-624"	119590	"R3.6KJ/2012,3.6K"	3.6K
R159-160 R259-260	119401	"R12KJ/2012,12K"	12K
R170-172 R379-381 R581	104234	"R10J/A,10"	10
"R303-304 R394 R403-404 R503-504 R603-604"	119548	"R3KJ/2012,3K"	3K
"R311-312 R340 R343 R350 R411-412 R440 R443 R450 R511-512 R540 R543 R550 R611-612 R640 R643 R650"	119670	"R560J/2012,560"	560
"R313-314 R413-414 R513-514 R613-614"	119420	"R150J/2012,150"	150
"R315-316 R341 R356 R415-416 R441 R515-516 R541 R556 R615-616 R641"	119353	"R100J/2012,100"	100
"R319-320 R419-420 R519-520 R619-620"	129502	"R2.4KJ/3216,2.4K"	2.4K
"R321-322 R347 R371 R421-422 R447 R471			

ELECTRICAL PARTS LIST

REF	ITEM NO.	DEFINE	VALUE
R521-522 R547 R571 R621-622 R647 R671"	119707	"R6.8KJ/2012,6.8K"	6.8K
"R327-328 R427-428 R527-528 R627-628"	104347	"R56KJ/A,56K"	56K
"R329-332 R382-383 R429-432 R482-483 R529-532 R582-583 R629-632 R682-683"	119645	"R4.7J/2012,4.7"	4.7
"R333-336 R433-436 R533-536 R633-636"	119346	"R10J/2012,10"	10
"R337-338 R437-438 R537-538 R637-638"	104454	"R10J/1W/MF/T,10 1W"	10 1W
"R342 R366 R442 R542 R642"	119576	"R3.3KJ/2012,3.3K"	3.3K
"R364 R385 R387 R392 R485 R487 R492 R585 R587 R592 R685 R687 R692"	119625	"R4.7KJ/2012,4.7K"	4.7K
R367-368	104673	"R56J/2W/MO/T,56 2W"	56 2W
"R369-370 R469-470 R569-570 R669-670"	119405	"R120KJ/2012,120K"	120K
"R374-375 R474-475 R574-575 R674-675"	104745	"R25J/5W/CE,25"	25
"R376-377 R476-477 R576-577 R676-677"	129577	"R4.7KJ/2W/MF/T,4.7K 2W"	4.7K 2W
R390 R490 R590 R690	119617	"R47J/2012,47"	47
R396	119502	"R220KJ/2012,220K"	220K
"R6 R103-104 R124 R130-131 R150 R203-204 R224 R230-231 R250 R344-345 R444-445 R544-545 R644-645"	119747	"R8.2KJ/2012,8.2K"	8.2K
R903 R910 R917 R924	119435	"R150KJ/2012,150K"	150K
R904 R911 R918 R925	119635	"R470KJ/2012,470K"	470K
SW301	112022	"SL/JSS-2208A,JSS-2208A"	JSS-2208A
"TP106 TP111 TP206 TP211 TP305-307 TP310 TP405-406 TP505-506 TP509 TP605-607 TP612"	106871	"TP/TP00325-21/T,TP00325-21"	TP00325-21
DPA-300Q FRONT			
IC902	103384	"PC/LTV847,LTV847"	LTV847
VR901	104992	"203A/09/RK09S1110011,20KA"	20KA
VR1-4	105055	"203A/09/RK09K11N0005,20KA"	20KA
CN1002	111360	"05P/LW-5267/2.5,LW5267-05P"	LW5267-05P
AN901	111365	"10P/LW-5267/2.5,LW5267-10P"	LW5267-10P
AN101 AN201	111371	"16P/LW-5267/2.5,LW5267-16P"	LW5267-16P
SW1	112178	"PW/SDDL1PASL051,SDDL1PASL051"	SDDL1PASL051
BK1-2	113528	"BK/113528,Bracket"	Bracket
LIM101-103	114982	"LIMITER/5.5/11.5/114982,11.5mm"	11.5mm
LIM1-16	114983	"LIMITER/5.5/14.7/114983,14.7mm"	14.7mm
LIM107	114985	"LIMITER/5.5/8/114985,8mm"	8mm
Q1-8 Q13-28 Q901-904 Q1001-1002	118663	"PNP/2N3906S/SOT23,2N3906S"	2N3906S
Q9-12	118672	"NPN/2N3904/SOT23,2N3904"	2N3904

ELECTRICAL PARTS LIST

REF	ITEM NO.	DEFINE	VALUE
IC1-4 IC901	118730	"NJM072M/DMP08P,NJM072M"	NJM072M
D5-12	119190	"D/BAS21/SOT23,BAS21"	BAS21
D1-4 D901-906			
D1001-1003	119196	"D/BAV99/SOT23,BAV99"	BAV99
R21-24 R907	119362	"R1KJ/2012,1K"	1K
R13-16	119366	"R10KJ/1608,10K"	10K
R49-52 R905-906	119367	"R10KJ/2012,10K"	10K
R37-40 R1001	119393	"R120J/2012,120"	120
R9-12 R33-36 R910	119401	"R12KJ/2012,12K"	12K
R901-902	119455	"R1.8KJ/2012,1.8K"	1.8K
R1003 R1006	119495	"R2.2KF/3216,2.2K 1%"	2.2K 1%
R5-8 R41-44 R1002	119499	"R22KJ/2012,22K"	22K
R911-914	119527	"R2.7KJ/2012,2.7K"	2.7K
R915-918	119548	"R3KJ/2012,3K"	3K
R1-4 R25-28 R908	119580	"R33KJ/2012,33K"	33K
R29-32 R909	119605	"R3.9KJ/2012,3.9K"	3.9K
R1004	119620	"R470J/2012,470"	470
R919 R921 R923 R925	119625	"R4.7KJ/2012,4.7K"	4.7K
R45-48 R920 R922			
R924 R926	119630	"R47KJ/2012,47K"	47K
R17-20	119711	"R68KJ/2012,68K"	68K
R54 R903-904	119747	"R8.2KJ/2012,8.2K"	8.2K
C1-4	120348	"CE4.7U16M/3216,4.7/16"	4.7/16
C13-16 C903-904 C908	120352	"CE100P50J/2012,100P"	100P
C901-902	120381	"CE330P50J/2012,330P"	330P
C9-12 C907	120391	"CE470P50J/2012,470P"	470P
C17-28 C909-910			
C1001	120421	"CE0.1U50K/2012,0.1U"	0.1U
LD1004	126148	"LD/B/3T/SLB1381N-UZ,SLB1381N-UZ"	SLB1381N-UZ
C911	126494	"CE0.01U250K/2012,0.01U"	0.01U
C905	127554	"EC2.2U50M/NXB/T,2.2/50"	2.2/50
LD1 LD5 LD9 LD13	129892	"LD/R/3T/BL-B4541,BL-B4541"	BL-B4541
LD2 LD6 LD10 LD14			
LD1002	130016	"LD/Y/3T/BL-3141-AA-AV,BL-3141-AA-AV"	BL-3141-AA-AV
LD3-4 LD7-8 LD11-12			
LD15-16 LD1001			
LD1003	130018	"LD/G/3.1T/BL-B2141,BL-B2141-AA-AV-T05"	BL-B2141-AA-AV-T05
CON901	130135	"TER/OQ0812510000G/08H/130135,TERMINAL08P"	TERMINAL08P
LD901-904	130293	"LD/Y/1608/BL-HKB36A,BL-HKB36A"	BL-HKB36A
AN1002 CN1001	133349	"05P/ASSY/2.5/133349,ASS'Y-05P"	ASS'Y-05P
C5-8 C906	133535	"MA0.18U63J/CEM/T,0.18/63(M)"	0.18/63(M)
DPA-300Q SMPS			
TH1	133656	"20/MJ/8A/194T/MS32-20008,20 ohm"	20 ohm
C13 C28 C37 C43	133532	"MA0.1U630KJ/MP,0.1/630(M)"	0.1/630(M)
C14	133441	"MA/10U300K/MKP,10/300(M)"	10/300(M)
Q2-3 Q12 Q14 Q23-24	133414	"N/IRFB4127PBF/TO220,IRFB4127PBF"	IRFB4127PBF
HS32	133374	"HS/133374/55,Heat sink"	Heat sink
HS2	133373	"HS/133373/55,Heat sink"	Heat sink
L1	133365	"PT/133365/311V,133365"	133365
L3 L6	133364	"PT/133364/311V,133364"	133364
L2 L7	133348	"TS/133348,133348"	133348
U4	133312	"UCC28220D/SOIC16P/2,UCC28220D"	UCC28220D
Q11 Q19-20 Q401	133112	"N/IPP60R099C6/TO220,IPP60R099C6"	IPP60R099C6
H5 H8 HS4	132989	"HS/132989/55,Heat sink"	Heat sink
H7	132986	"HS/132986/55,Heat sink"	Heat sink
R146	132932	"R430KJ/3216,430K"	430K

ELECTRICAL PARTS LIST

REF	ITEM NO.	DEFINE	VALUE
R58	132898	"R62KF/2012,62K 1%"	62K 1%
C29 C40	132883	"MA2.2U250J/MP,2.2/250(M)"	2.2/250(M)
C1-3 C15 C47 C50	132860	"MA0.022U630J/MP,0.022/630(M)"	0.022/630(M)
T4	132857	"PT/132857/220V,132857"	132857
R41	132849	"R240KJ/3216,240K"	240K
R143	132845	"R680KJ/3216,680K"	680K
Q1 Q9 Q15 Q17-18 Q410	132831	"PNP/BCP69/SOT223,BCP69"	BCP69
Q4 Q7 Q10 Q16 Q21-22	132830	"NPN/BCP68/SOT223,BCP68"	BCP68
U17	132828	"MIC2778-2BM5/SOT23-5,MIC2778-2BM5"	MIC2778-2BM5
R22 R45 R65 R81 R90 R93	132827	"R6.8J/3216,6.8"	6.8
T5	132819	"T/132819,132819"	132819
C201	132816	"EC10U450M/NFC,10/450"	10/450
ZD1-6 ZD8-11	132803	"ZD/18V/MMBZ5248B/SOT23,18V"	18V
R459	132483	"R27KJ/3216,27K"	27K
R16-17 R134-135	132392	"R1.8MJ/3216,1.8M"	1.8M
D2-3 D8 D11 D19 D22-23 D25-30 D33-34 D36 D39 D44	132384	"SD/US1M/SMA,US1M"	US1M
C46 C56	132383	"EC2700U200M/TLS,2700/200"	2700/200
BK1 BK3	132374	"BK/132374,Bracket"	Bracket
BK4	132373	"BK/132373,Bracket"	Bracket
U7-8	132340	"UCC25600/SOIC08P/2,UCC25600"	UCC25600
U12 U14	132336	"IR2113/SOIC16P/2,IR2113"	IR2113
U11	132334	"UCC27324D/SOIC08P/2,UCC27324D"	UCC27324D
IC201	132173	"TOP242PN/2,TOP242PN"	TOP242PN
R9 R75 R89	130591	"R0K/3216,0 10%"	0 10%
C98 C126-127 C402	130523	"CE220P1KK/Y5R,220P1K"	220P1K
U18	129542	"NJM2403M/DMP08P,NJM2403M"	NJM2403M
D7	129532	"D/ES3G/DO214AB,ES3G"	ES3G
C38	129356	"CE10U6.3K/2012,10U6.3"	10U6.3
U5	128383	"78R15/KIA/API,78R15"	78R15
F1-2	128336	"FUSE/178.6165,178.6165"	178.6165
IC203	128200	"LM26CIM5-TPA/SOT23-5,LM26CIM5-TPA"	LM26CIM5-TPA
C85 C120	127711	"EC10U50M/NXB/T,10/50"	10/50
BD2-3 BD6	127462	"120OHM/BEAD/127462,120ohm"	120ohm
R24	126498	"R2.7KF/2012,2.7K 1%"	2.7K 1%
L4-5	125913	"2.8UH/LINE/125913,2.8UH"	2.8UH
D12-13 D15 D32 D35 D37-38 D40 D47-48	125880	"SD/SS16/SMA,SS16"	SS16
R142	125872	"R200KJ/3216,200K"	200K
RLY3-4	125868	"24V/881H-1AH-C/S2L1/2,24V"	24V
BD1	125866	"BD/TS15P05G,TS15P05G"	TS15P05G
D42	125856	"ZD/MMSZ5254B/SOD123,MMSZ5254B-27V"	MMSZ5254B-27V
C48 C454	125849	"EC220U100M/NXA,220/100"	220/100
C34	125848	"EC100U50M/NXB/T,100/50"	100/50
U1 U6 U9-10 U15 U401	125843	"KIA431AF/SOT89,KIA431AF"	KIA431AF
C104-105	125720	"CE2200P400M/SD,2200P"	2200P
C77 C97	125719	"CE0.001U1KK/Y5P/T,0.001/1K"	0.001/1K
D4 D17 D24	125709	"D/SF20LC30,SFF1606G"	SFF1606G
D5 D41	125709	"D/SFF1606G,SFF1606G"	SFF1606G
C44 C59 C128 C133	125212	"CE0.1U100K/3216,0.1U100"	0.1U100
CX1 CX3-4	125195	"MA0.47U275M/AC,0.47/275(M)"	0.47/275(M)
D6 D9 D14 D18 D31	125194	"D/SF20LC30,SF20LC30"	SF20LC30
Q5 Q8	124670	"NPN/MMBT2222/SOT23,MMBT2222"	MMBT2222

ELECTRICAL PARTS LIST

REF	ITEM NO.	DEFINE	VALUE
ZD7	122227	"ZD/UZ5.1V/0.2W/USC,5.1V 0.2W"	5.1V 0.2W
C70 C490	120431	"CE0.022U50K/2012,0.022U"	0.022U
"C7 C9 C17 C20 C24			
C31 C39 C45 C52 C54			
C57 C65 C67 C69 C76			
C84 C87 C91 C93-94			
C99 C110 C117 C204			
C207 C220"	120421	"CE0.1U50K/2012,0.1U"	0.1U
C22	120417	"CE0.01U50K/2012,0.01U"	0.01U
C19	120363	"CE180P50J/2012,180P"	180P
C205	120348	"CE4.7U16M/3216,4.7/16"	4.7/16
C27 C64 C114 C451	120315	"CE0.47U50Z/2012,0.47U"	0.47U
C33 C36 C109 C118	120275	"CE2200P50K/2012,2200P"	2200P
"C5-6 C10 C21 C30			
C32 C49 C71 C75 C83			
C86 C96 C111 C115"	120251	"CE1U50Z/2012,1U"	1U
C79 C100	120245	"CE0.1U50K/3216,0.1U"	0.1U
C457	120235	"CE0.001U50J/2012,0.001U"	0.001U
R12 R14 R31 R76 R80			
R91 R178-179	120063	"R0J/3216,0"	0
R71 R97-99 R402 R404	119955	"R51J/2012,51"	51
R30 R46 R94	119934	"R3J/3216,3"	3
R37	119823	"R75KF/2012,75K 1%"	75K 1%
R103	119822	"R68KF/3216,68K 1%"	68K 1%
R104	119732	"R7.5KJ/2012,7.5K"	7.5K
R39	119727	"R750J/2012,750"	750
R11 R26	119701	"R680J/2012,680"	680
R105 R461	119689	"R6.2KJ/2012,6.2K"	6.2K
R36 R72 R206	119670	"R560J/2012,560"	560
R68 R106 R130 R172	119655	"R5.1KJ/2012,5.1K"	5.1K
R144-145	119636	"R470KJ/3216,470K"	470K
R18-20 R40 R113			
R118-120 R138-139			
R203-204	119631	"R47KJ/3216,47K"	47K
R7-8 R126-127 R137			
R162	119630	"R47KJ/2012,47K"	47K
R116 R469	119625	"R4.7KJ/2012,4.7K"	4.7K
R53	119620	"R470J/2012,470"	470
R87 R109	119608	"R39KJ/2012,39K"	39K
R44	119586	"R330KJ/2012,330K"	330K
R33-34	119581	"R33KJ/3216,33K"	33K
R1	119580	"R33KJ/2012,33K"	33K
R10 R29 R110 R123	119576	"R3.3KJ/2012,3.3K"	3.3K
R158	119548	"R3KJ/2012,3K"	3K
R4 R82 R96 R101-102	119497	"R2.2KJ/2012,2.2K"	2.2K
R149	119492	"R220J/2012,220"	220
R205	119487	"R22J/2012,22"	22
R42	119476	"R20KJ/2012,20K"	20K
R59-60 R85 R114			
R152 R159 R490	119473	"R2KJ/2012,2K"	2K
R54	119466	"R180KJ/2012,180K"	180K
R140	119436	"R150KJ/3216,150K"	150K
R43 R55 R131	119428	"R15KJ/2012,15K"	15K
R111 R463	119408	"R1.3KF/2012,1.3K 1%"	1.3K 1%
R50	119408	"R1.3KJ/2012,1.3K"	1.3K
R62 R112	119405	"R120KJ/2012,120K"	120K
R15 R25 R79 R153	119401	"R12KJ/2012,12K"	12K

ELECTRICAL PARTS LIST

REF	ITEM NO.	DEFINE	VALUE
R52 R107 R462	119396	"R1.2KJ/2012,1.2K"	1.2K
R48 R61 R155-156	119388	"R12J/2012,12"	12
R201-202	119374	"R1MJ/3216,1M"	1M
R78	119373	"R1MJ/2012,1M"	1M
R83 R117 R121	119370	"R100KJ/2012,100K"	100K
"R6 R27 R35 R38 R47			
R51 R56 R67 R70			
R73-74 R84 R86 R92			
R100 R108 R136			
R154 R161			
R180 R403 R405"	119367	"R10KJ/2012,10K"	10K
R21 R23 R28 R32 R69			
R88	119362	"R1KJ/2012,1K"	1K
R63-64	119348	"R10J/3216,10"	10
R2 R13 R176-177 R207	119346	"R10J/2012,10"	10
R95	119344	"R3J/3216,3"	3
D204	119210	"ZD/10V/BZX84C/SOT23,10V"	10V
D205	119202	"D/MURS160T3/DO214AA,MURS160T3"	MURS160T3
D1 D10 D16 D20			
D45-46	119171	"D/1N4148/SOT23,1N4148"	1N4148
PC1 PC3-6 PC8			
PC10-11 PC16	118872	"PC/LTV817B,LTV817B"	LTV817B
Q26	118663	"PNP/2N3906S/SOT23,2N3906S"	2N3906S
Q6	118657	"PNP/KTA1666/SOT89,KTA1666"	KTA1666
Q25	118638	"NPN/KRC403/USM,KRC403"	KRC403
Q13	118627	"PNP/KRA303/USM,KRA303"	KRA303
HS1	114265	"HS/114265/30,Heat sink"	Heat sink
TER1-2	111903	"TER/250/01V/111903,250T"	250T
JK1	111737	"ACIN/SS-7B-1-09,AC IN"	AC IN
F3	111579	"FUSE/GF-205B,GF-205B"	GF-205B
CN1-3	111360	"05P/LW-5267/2.5,LW5267-05P"	LW5267-05P
CN4	110850	"TER/BL/010/02H/110850,TERMINAL02P"	TERMINAL02P
CN5	110495	"05P/B5P-VH/3.96/110495,B05PVH-05P"	B05PVH-05P
TP1-12 TP15 TP20			
TP201 TP209	106871	"TP/TP00325-21/T,TP00325-21"	TP00325-21
C455-456	105909	"MA0.1U250J/DEM/T,0.1/250(M)"	0.1/250(M)
C35 C202	105793	"CE2200P250M/AC,2200P250"	2200P250
C11-12 C42 C51	105625	"EC2200U35M/RD,2200/35"	2200/35
C25	105548	"EC4.7U50M/RG/T,4.7/50"	4.7/50
C203 C206	105508	"EC47U25M/RG/T,47/25"	47/25
C90	105463	"EC22U50M/SHL/T,22/50"	22/50
C4 C8 C18 C55 C82			
C89 C92	105462	"EC22U25M/RG/T,22/25"	22/25
C16 C23	105421	"EC100U25M/RG/T,100/25"	100/25
C62 C66 C68	105351	"EC220U50M/RD,220/50"	220/50
R77 R115	104537	"R10KJ/2W/MO/T,10K 2W"	10K 2W
R3 R5 R128-129	104518	"R10J/2W/MO/T,10 2W"	10 2W
R57	104453	"R750KJ/1/2W/MF/A,750K 1/2W"	750K 1/2W
VAR1-2	103422	"ZNR/361/INR14D361,360V"	360V
U3	103061	"7812/KIA,7812"	7812
DPA-300Q WIRING			
	133175	"FUSE,0215015.MXP"	FUSE
	113303	"FAN BKT ""R"""	
	113302	"FAN BKT ""L"""	
	114182	DC FAN(3110KL-05W-B70-F04	MOTOR/FAN

ELECTRICAL PARTS LIST

REF	ITEM NO.	DEFINE	VALUE
	133089	"DC TERMNAL BLOCK,2P,BI-16PTHC"	CONNECTOR WAFER/TERMINAL
	133388	"CON ASS'Y,FL,5P,5264,5264,AWG26,250mm "	CONNECTOR ASS'Y
	133389	"CON ASS'Y,FL,16P,5264,5264,AWG26,430mm"	CONNECTOR ASS'Y
	133390	"CON ASS'Y,DS,5P,5239,5239,AWG18,150mm"	CONNECTOR ASS'Y
	133391	"CON ASS'Y,FL,10P,5264,5264,AWG26,150mm"	CONNECTOR ASS'Y
	109889	"CON ASS'Y,DS,1P,250T08,250T08,80MM"	CONNECTOR ASS'Y

TOP & BOTTOM VIEW OF P.C BOARD

DPA-300T AMP

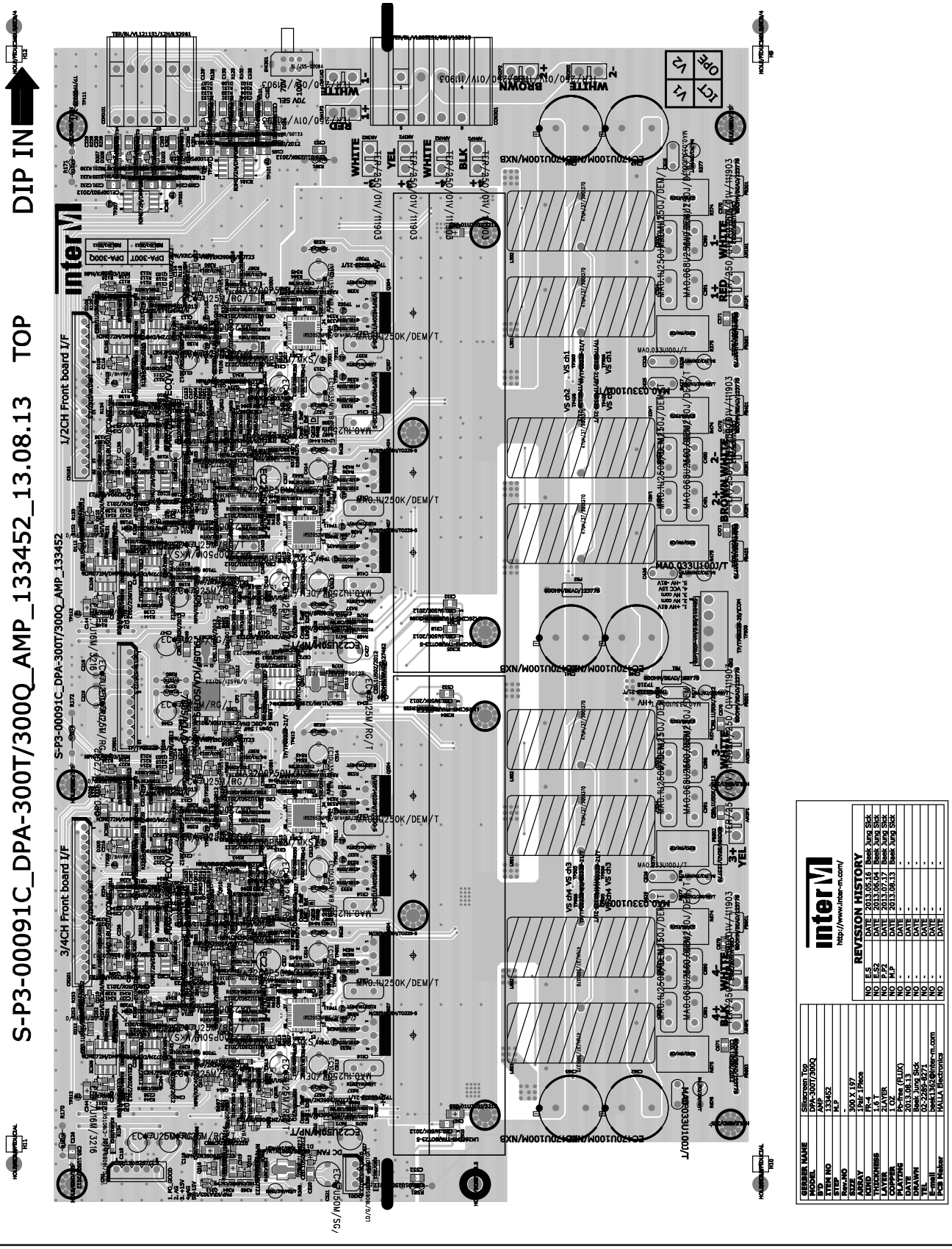

TOP & BOTTOM VIEW OF P.C BOARD

DPA-300T AMP

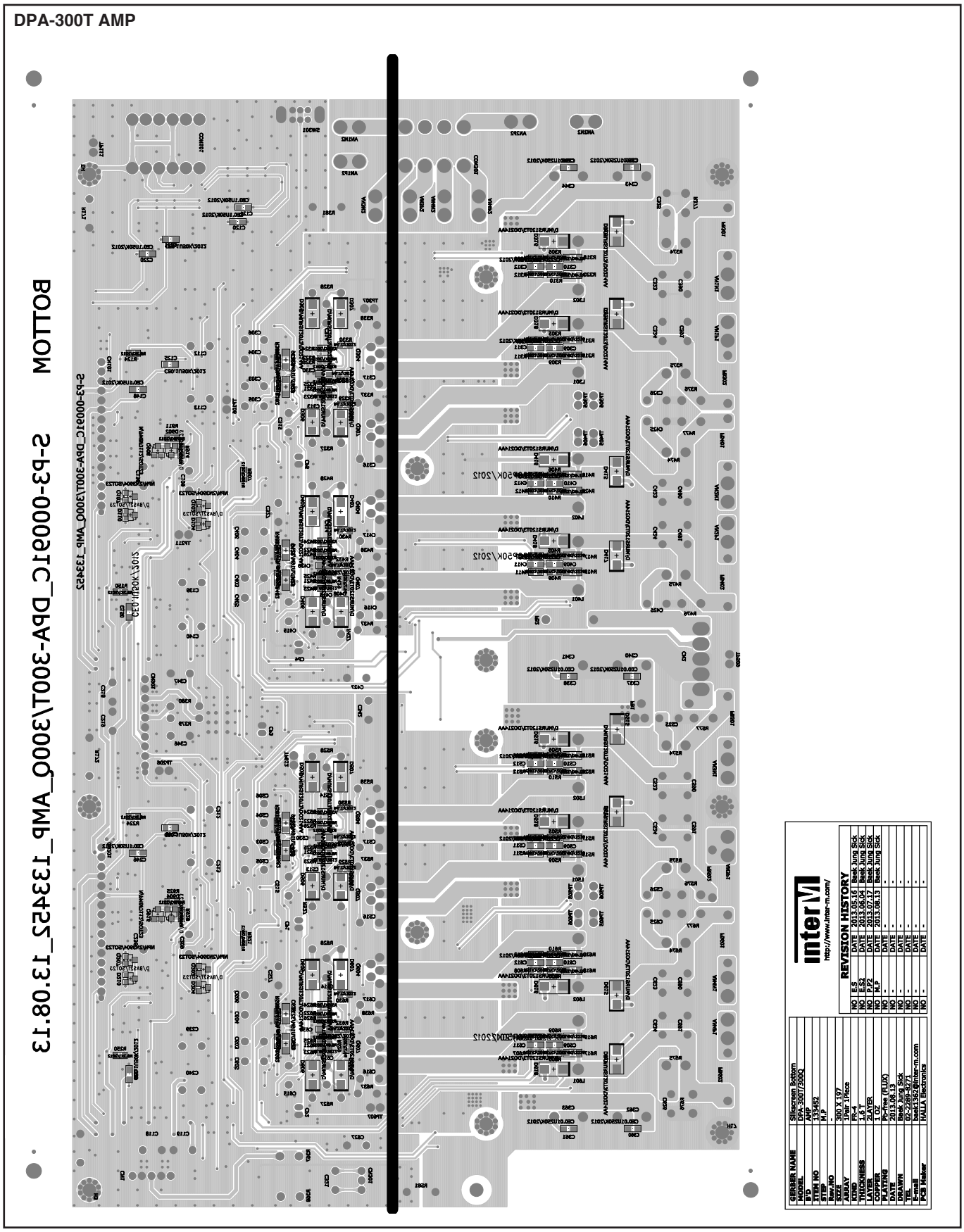

TOP & BOTTOM VIEW OF P.C BOARD

DPA-300T FRONT

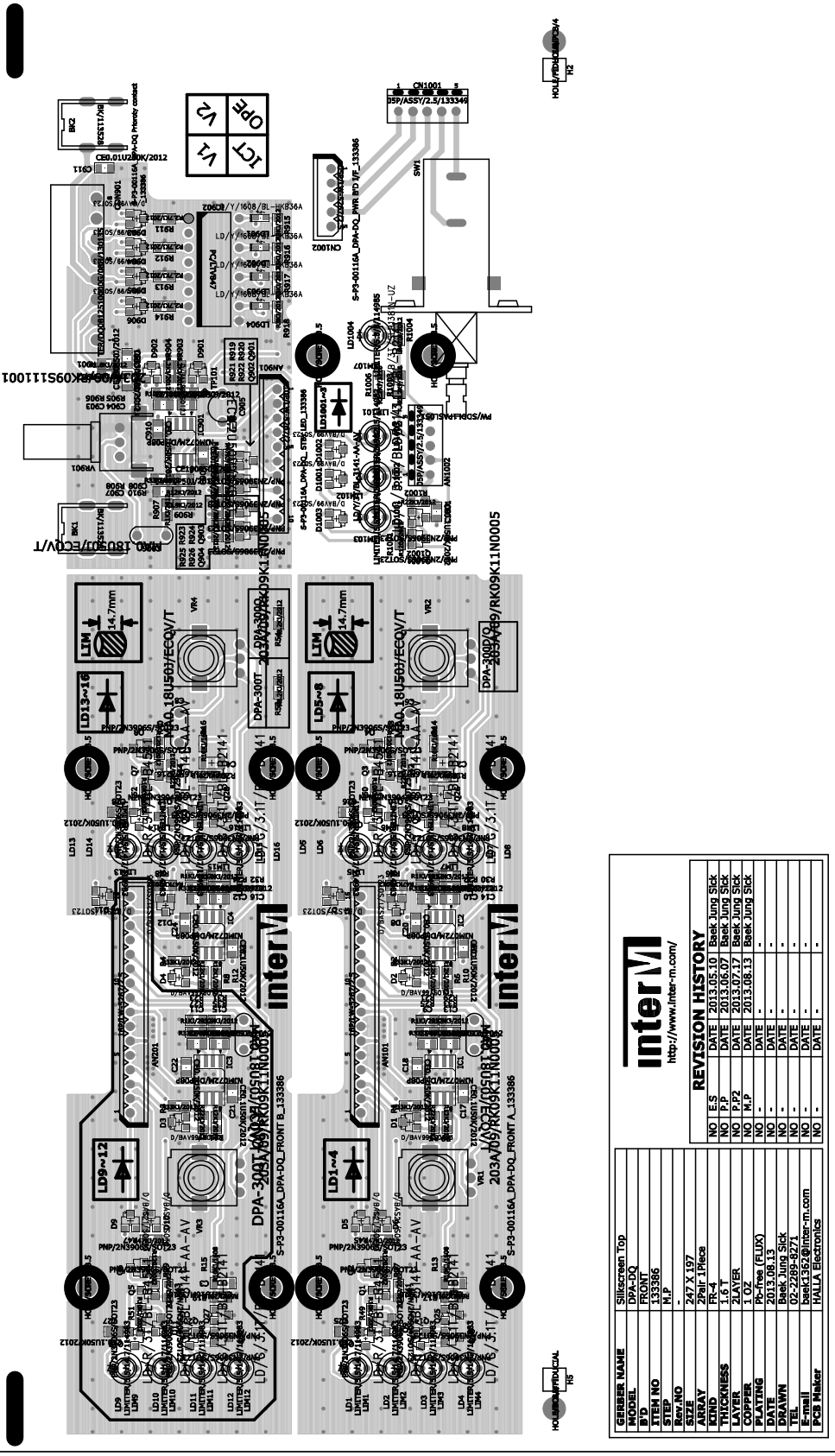

TOP & BOTTOM VIEW OF P.C BOARD

DPA-300T FRONT

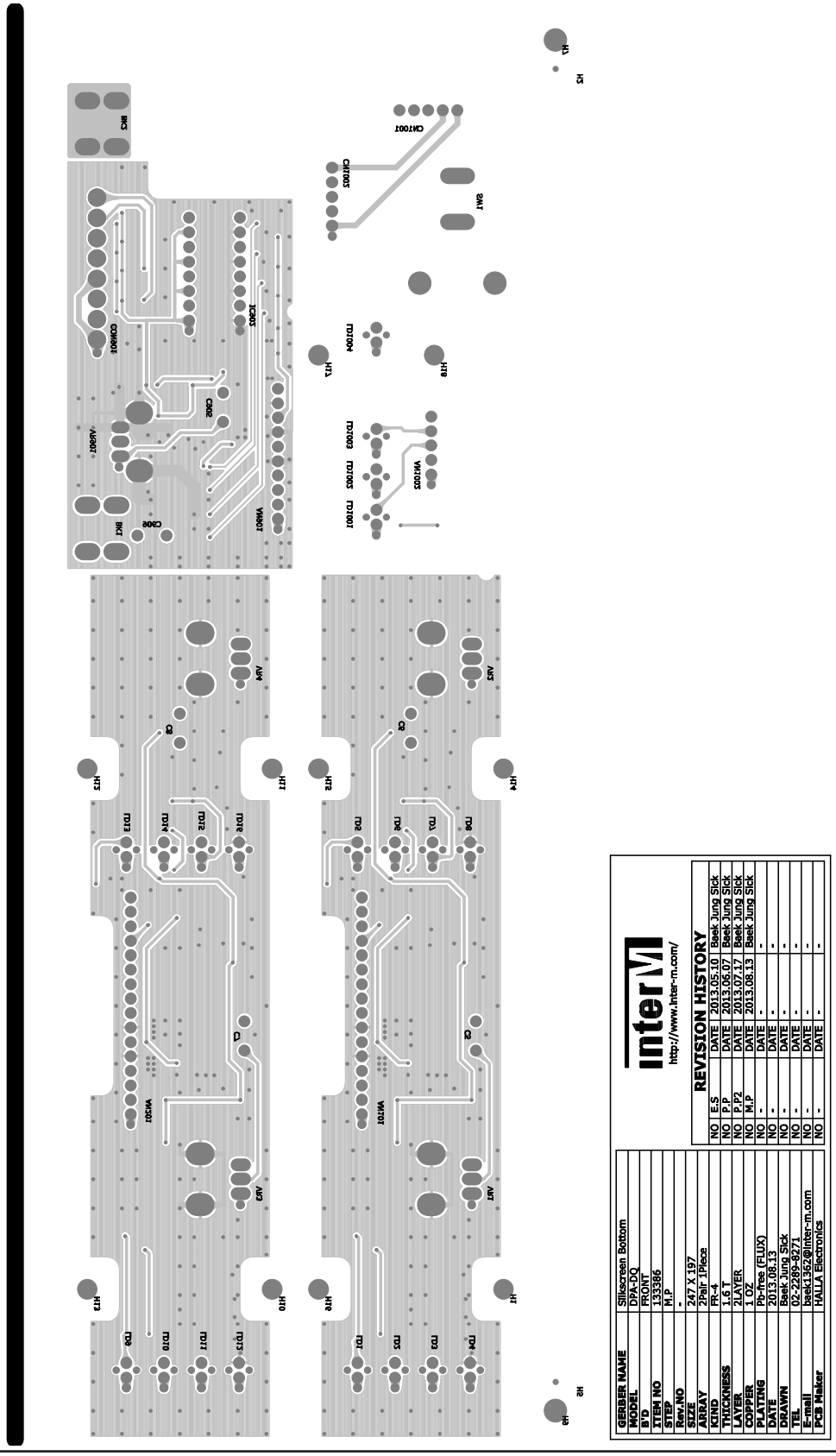

TOP & BOTTOM VIEW OF P.C BOARD

DPA-300T SMPS

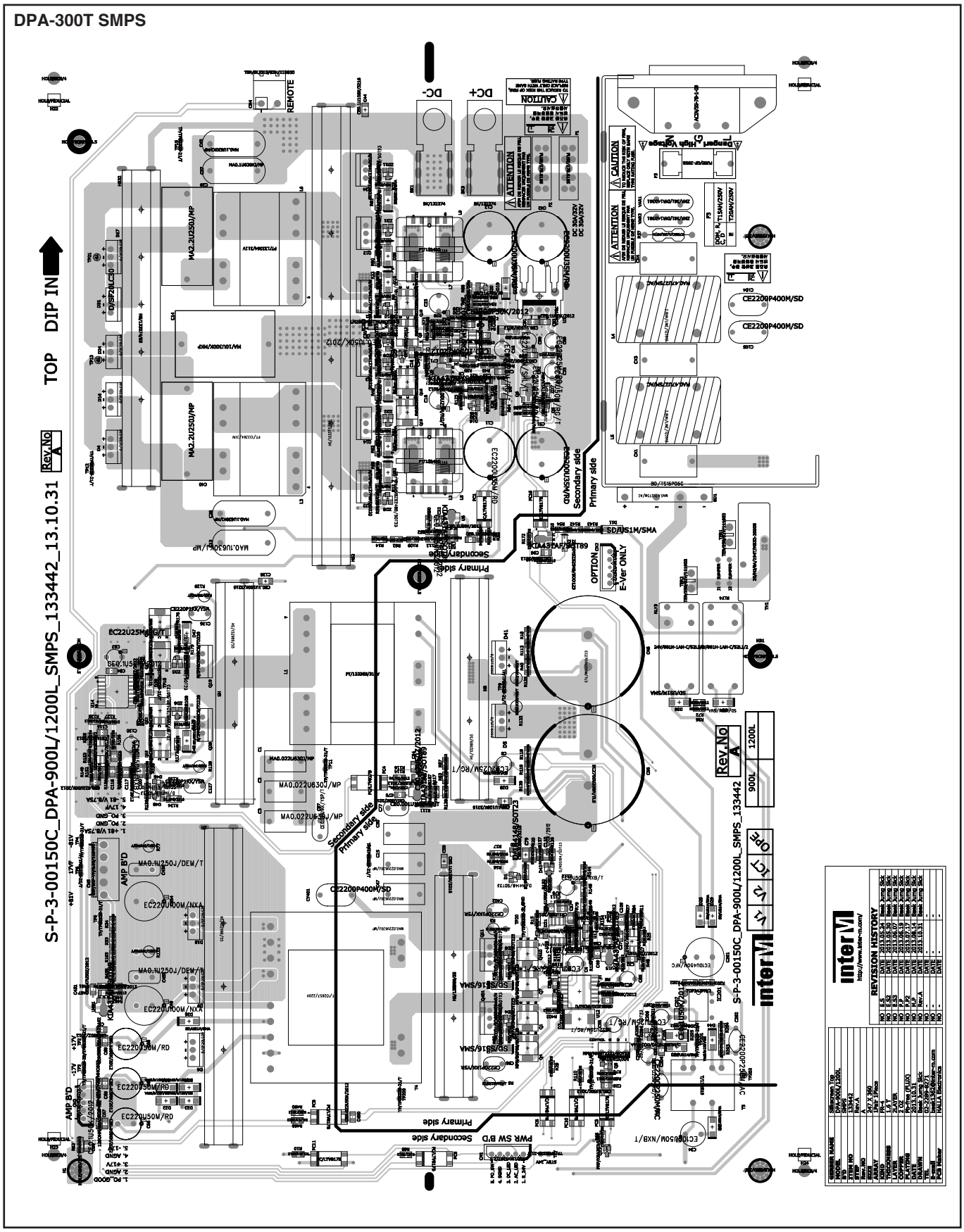

TOP & BOTTOM VIEW OF P.C BOARD

DPA-300T SMPS

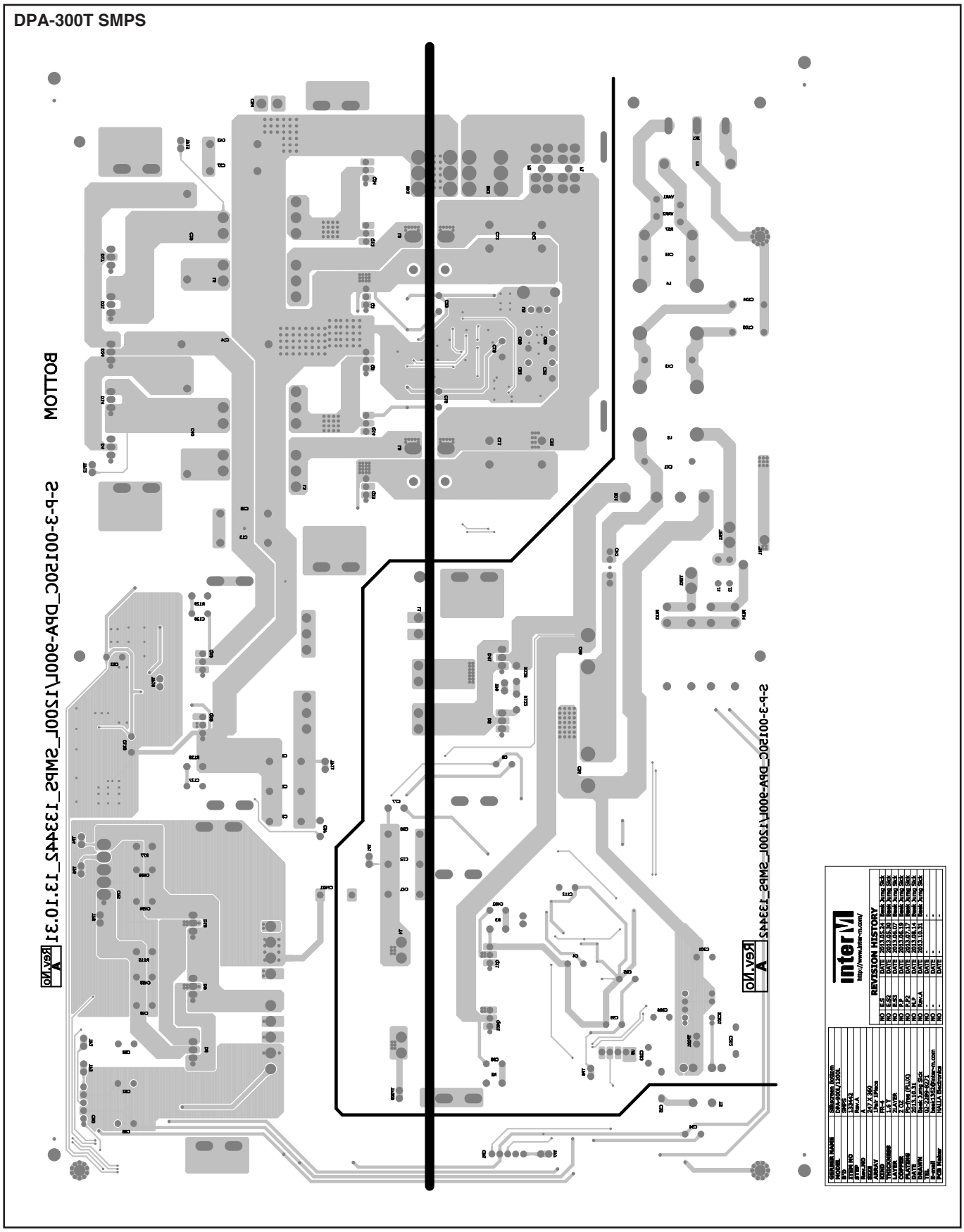

TOP & BOTTOM VIEW OF P.C BOARD

DPA-300Q AMP

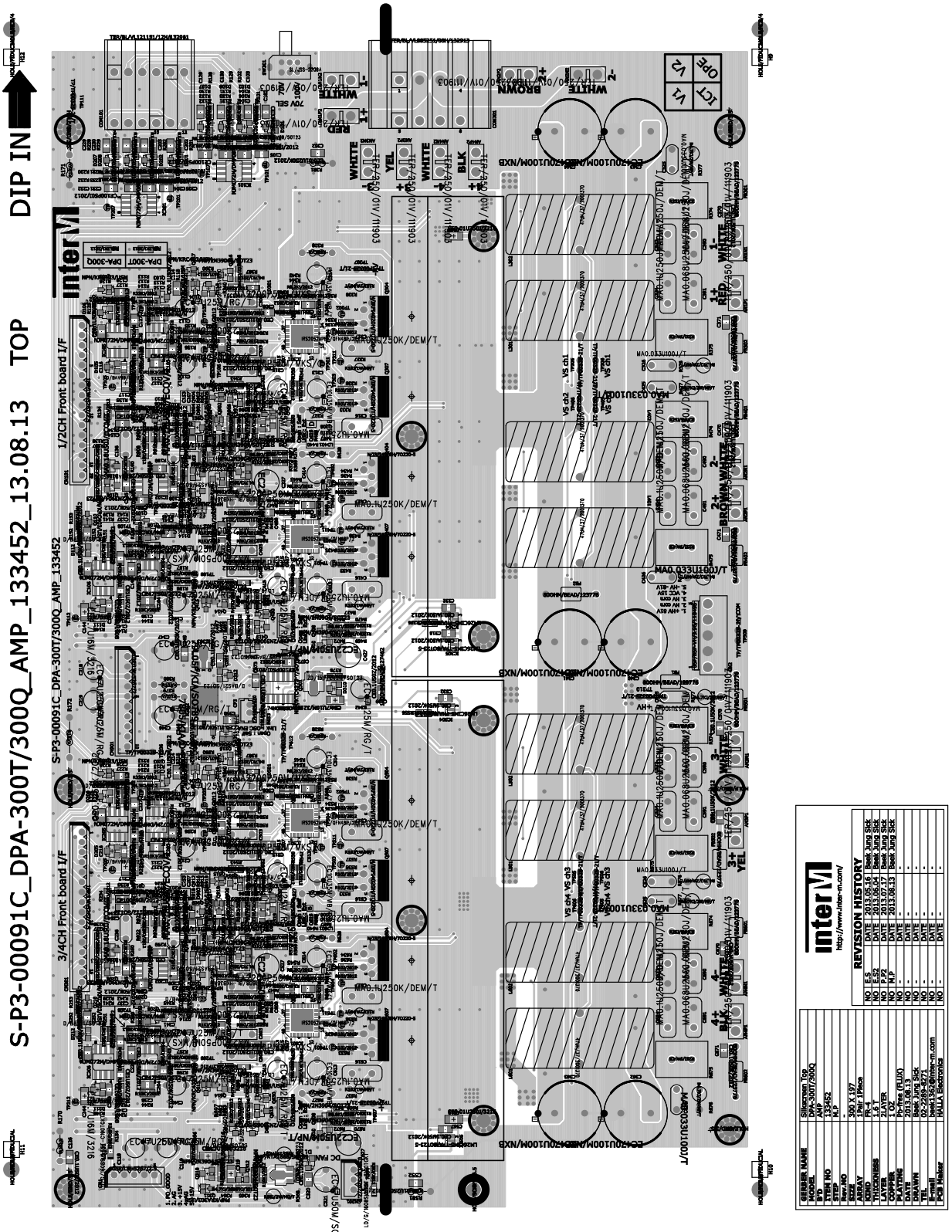

TOP & BOTTOM VIEW OF P.C BOARD

DPA-300Q AMP

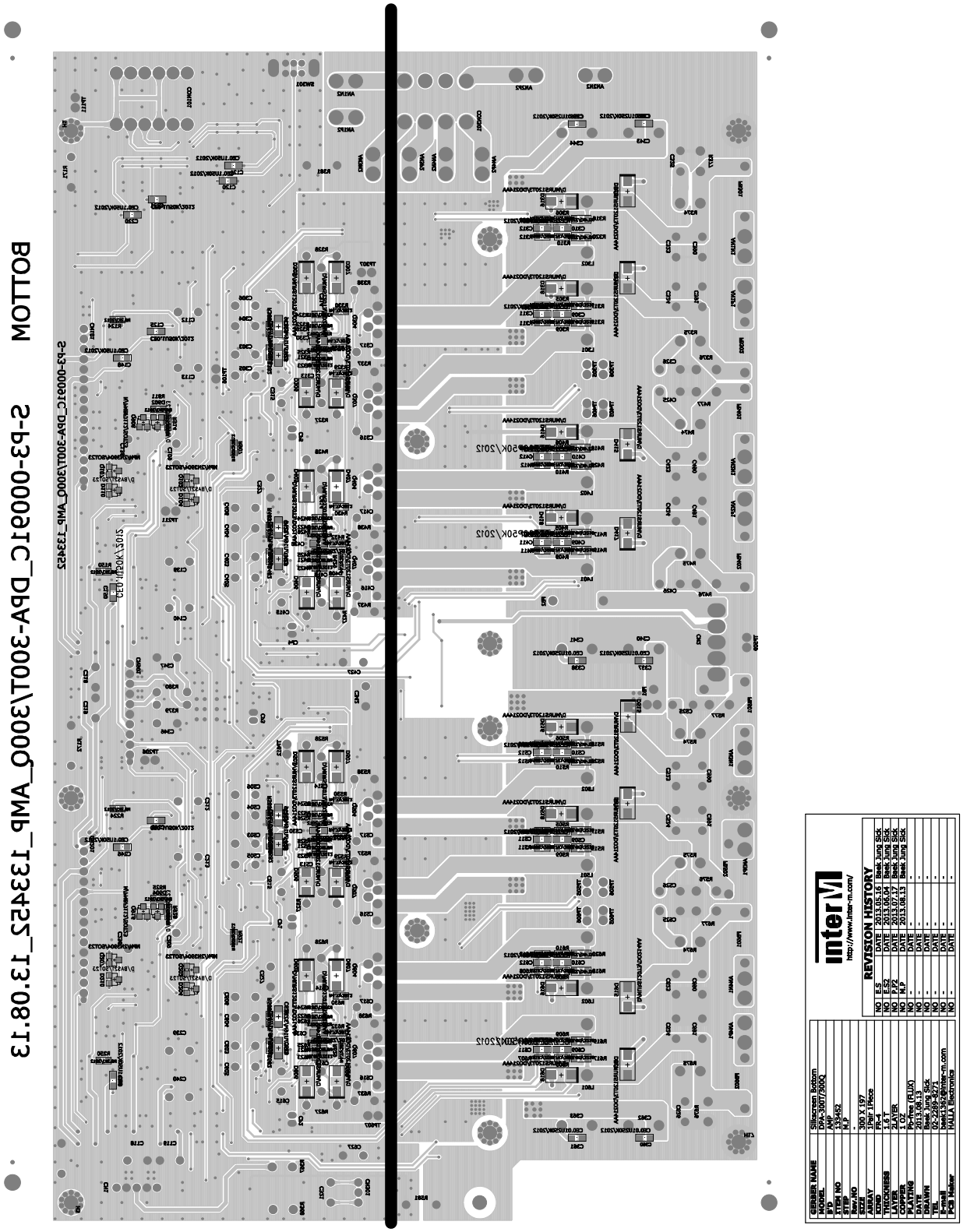

TOP & BOTTOM VIEW OF P.C BOARD

DPA-300Q FRONT

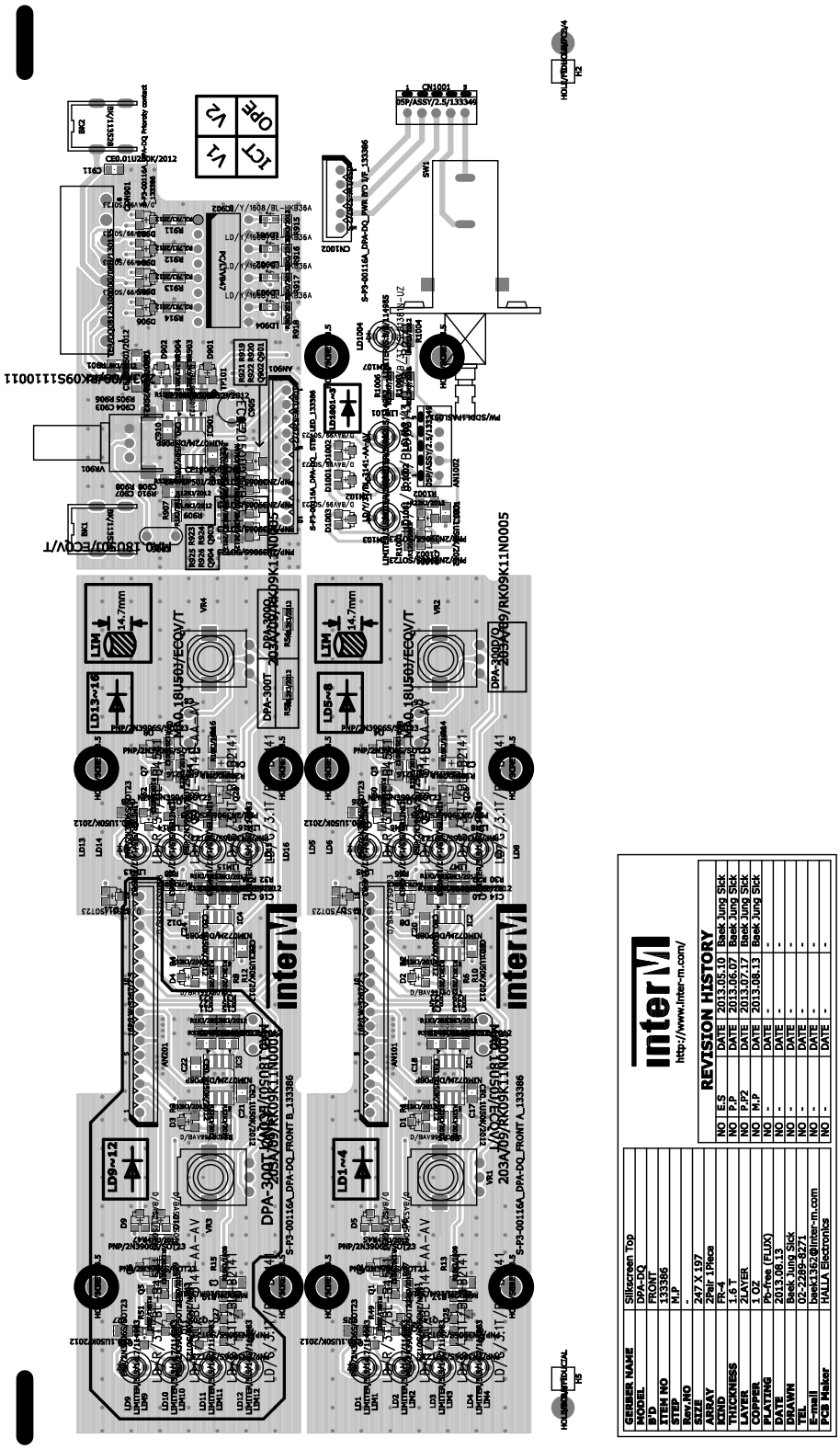

TOP & BOTTOM VIEW OF P.C BOARD

DPA-300Q FRONT

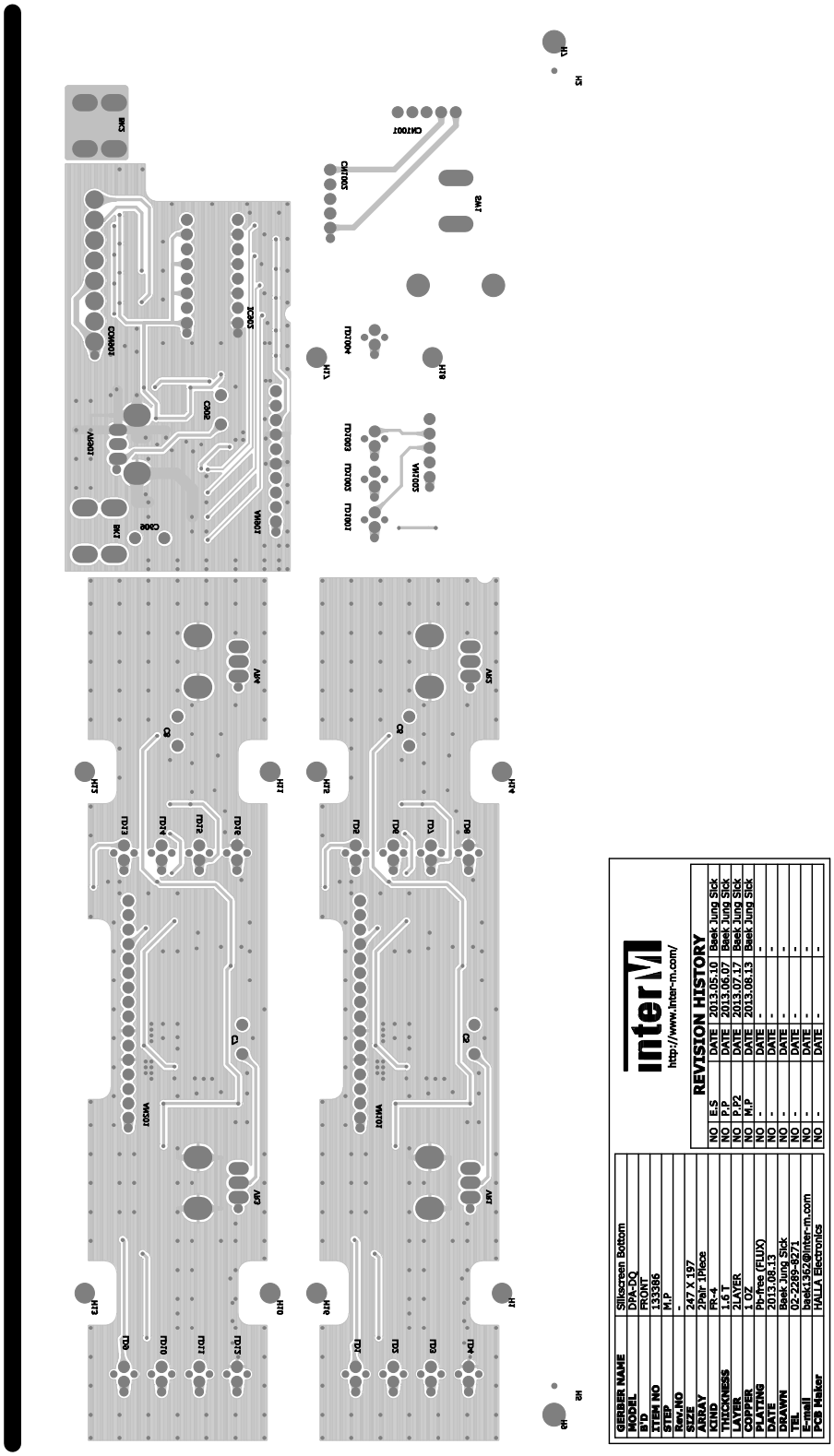

TOP & BOTTOM VIEW OF P.C BOARD

DPA-300Q SMPS

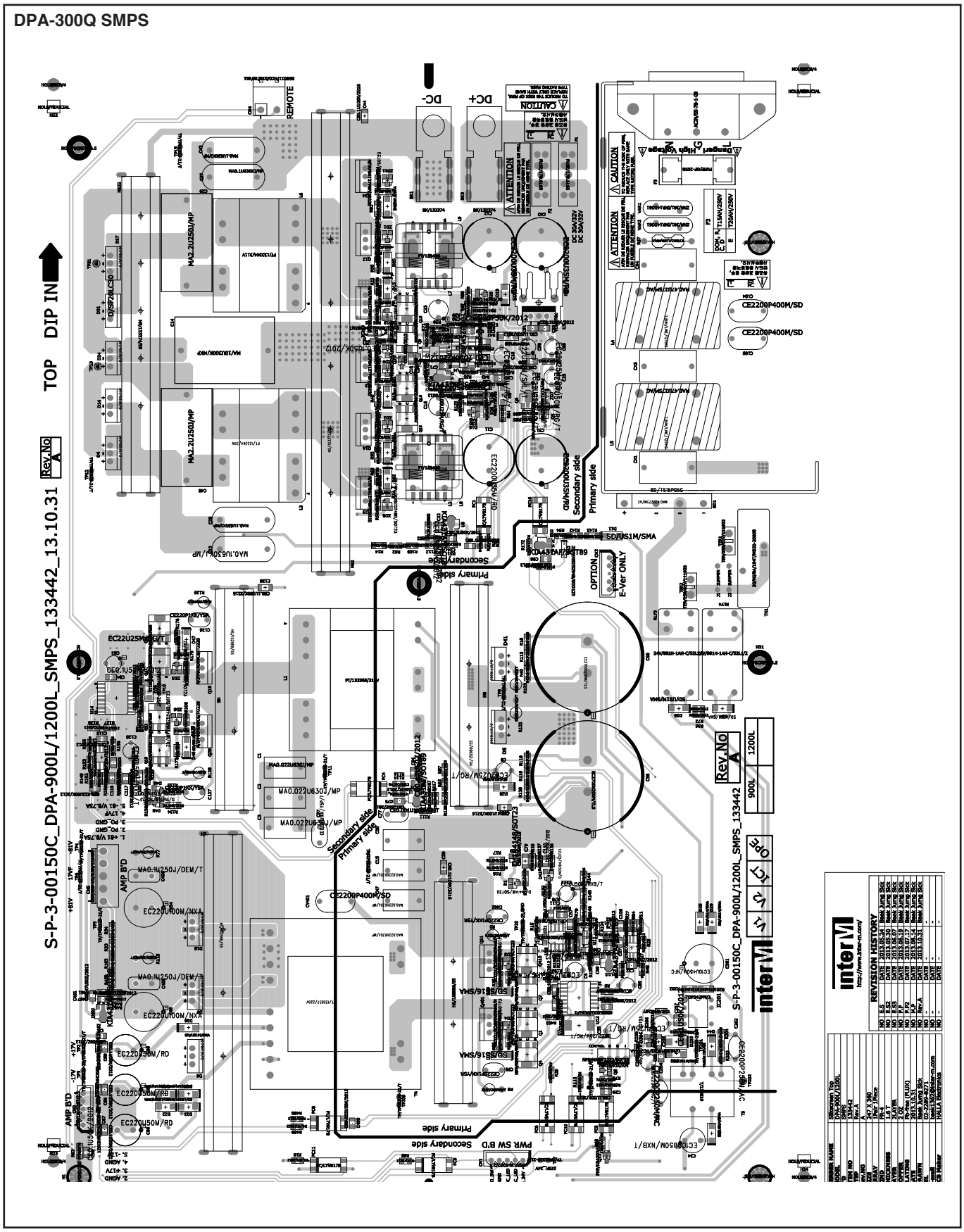

TOP & BOTTOM VIEW OF P.C BOARD

DPA-300Q SMPS

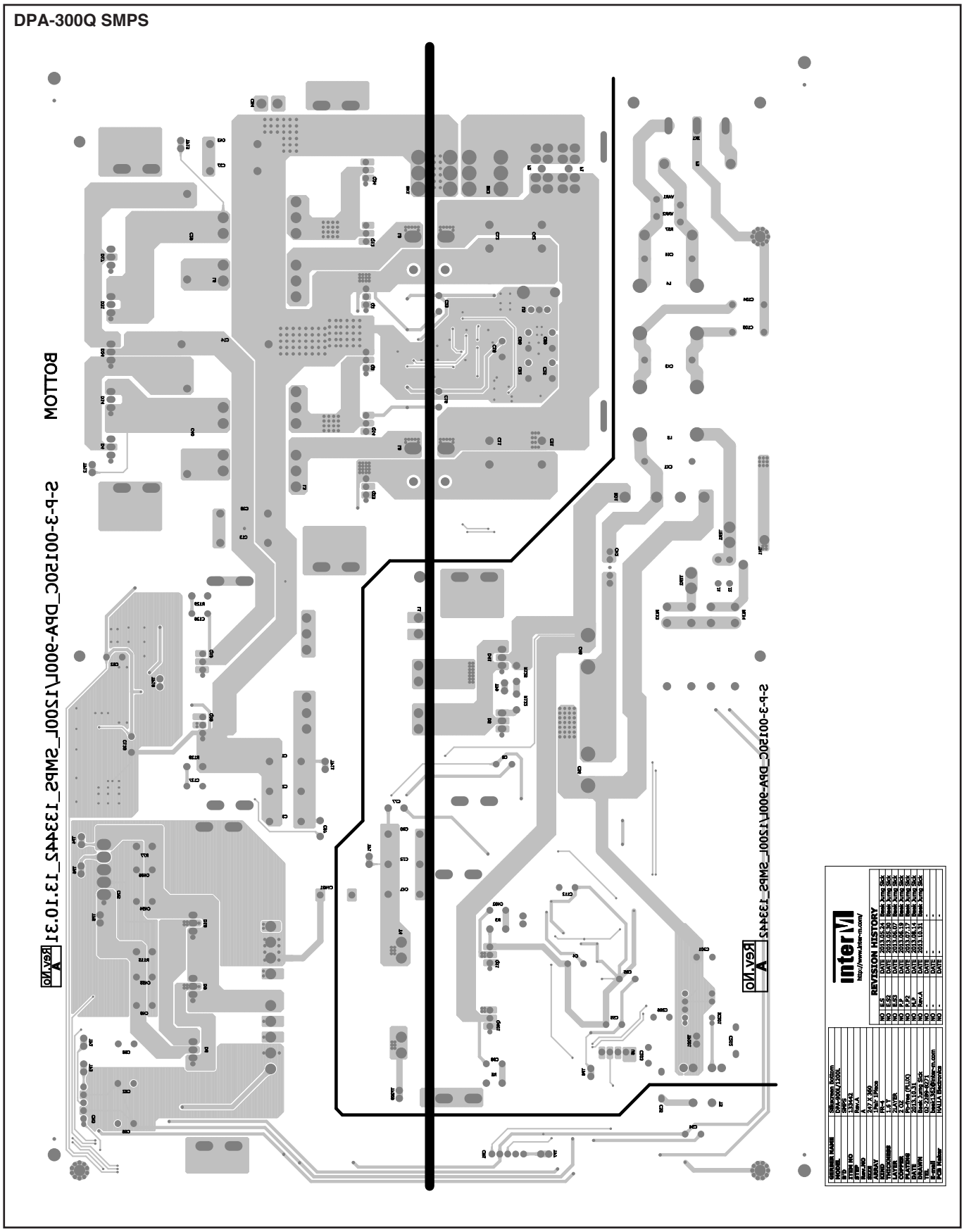

BLOCK DIAGRAM

DPA-300Q

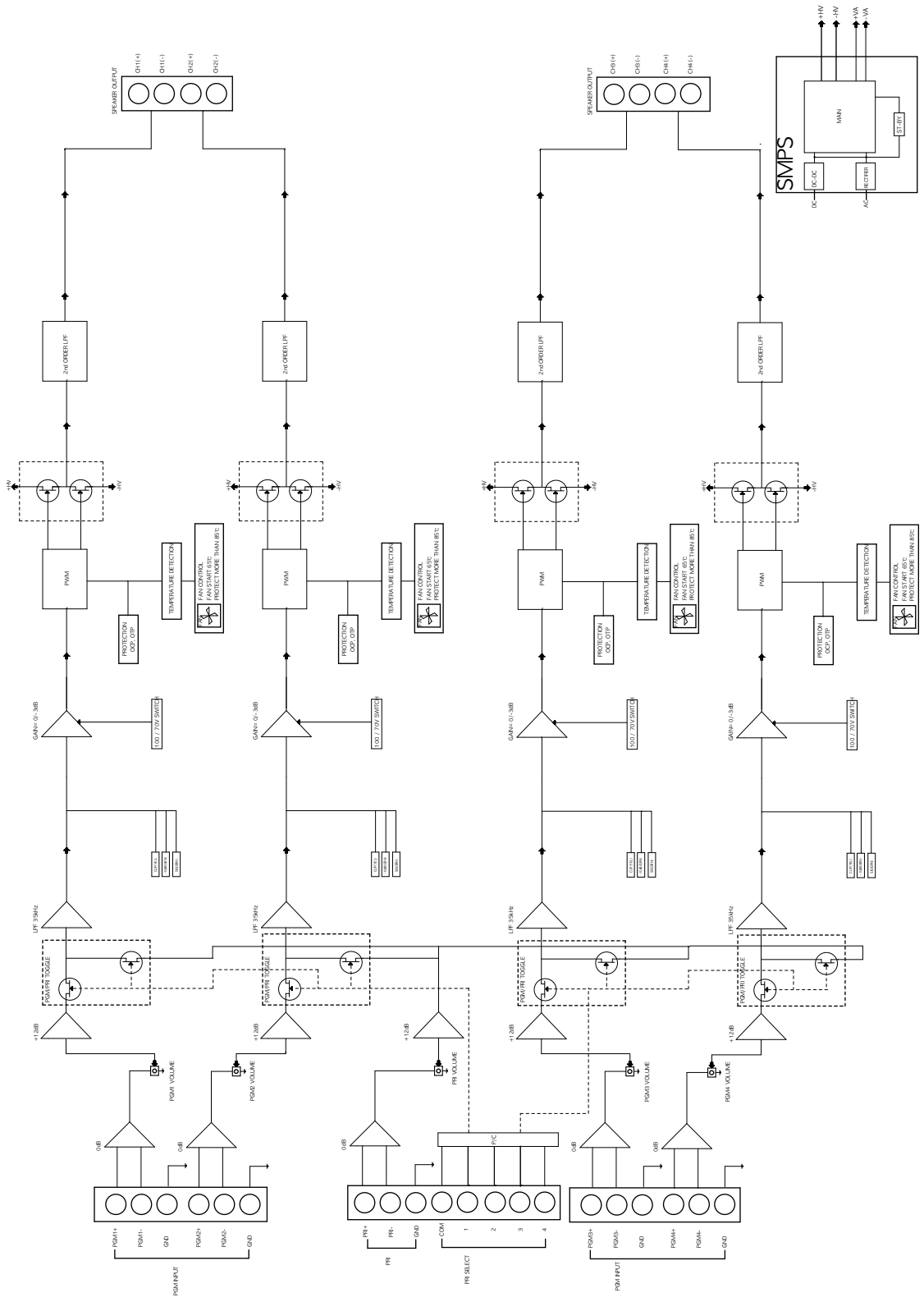

BLOCK DIAGRAM

DPA-300T

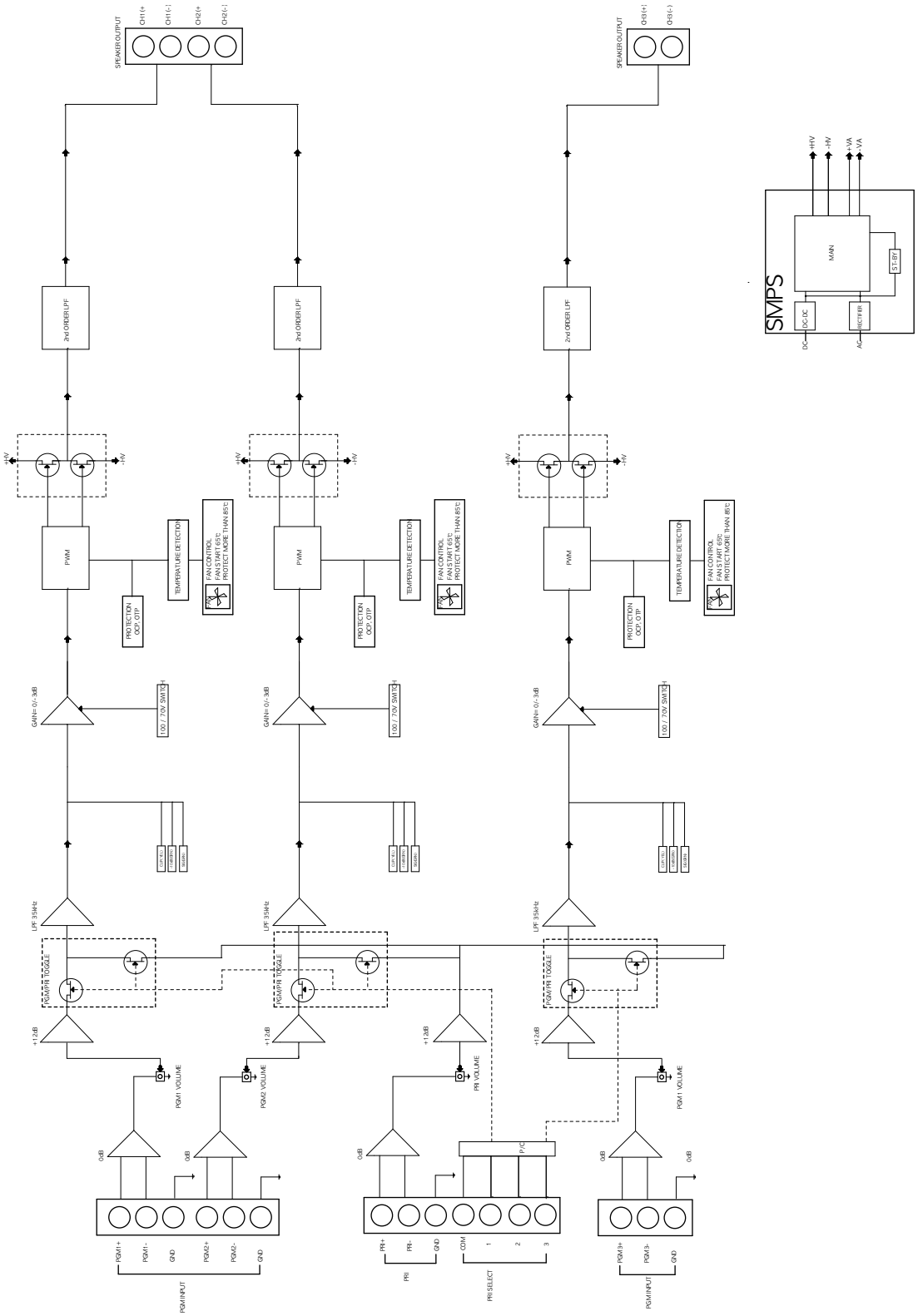

SCHEMATIC DIAGRAM

DPA-300T AMP

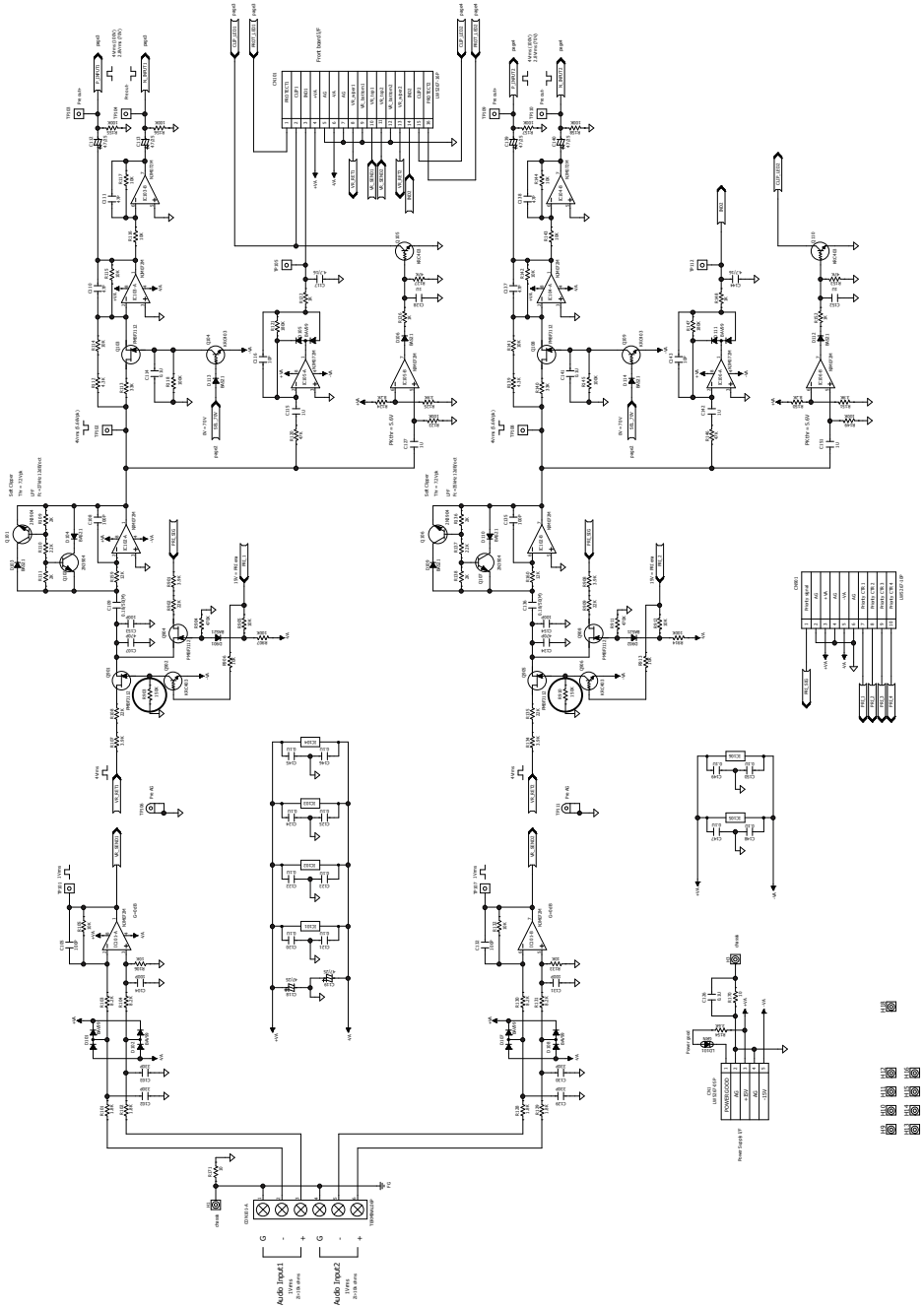

DPA-300T AMP

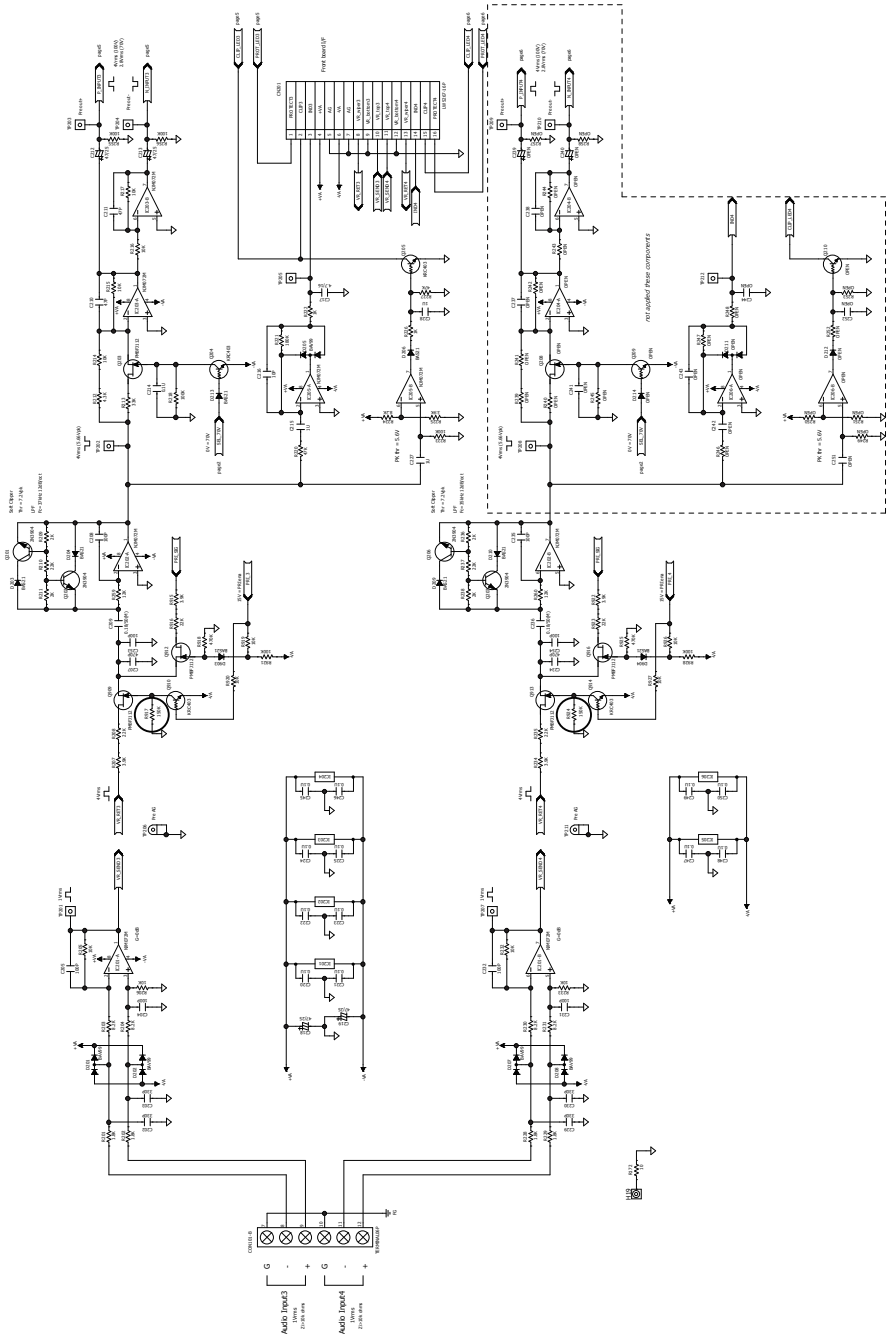
Front board I/F
not applied these components
Audio Input3
Audio Input4

SCHEMATIC DIAGRAM

DPA-300T AMP

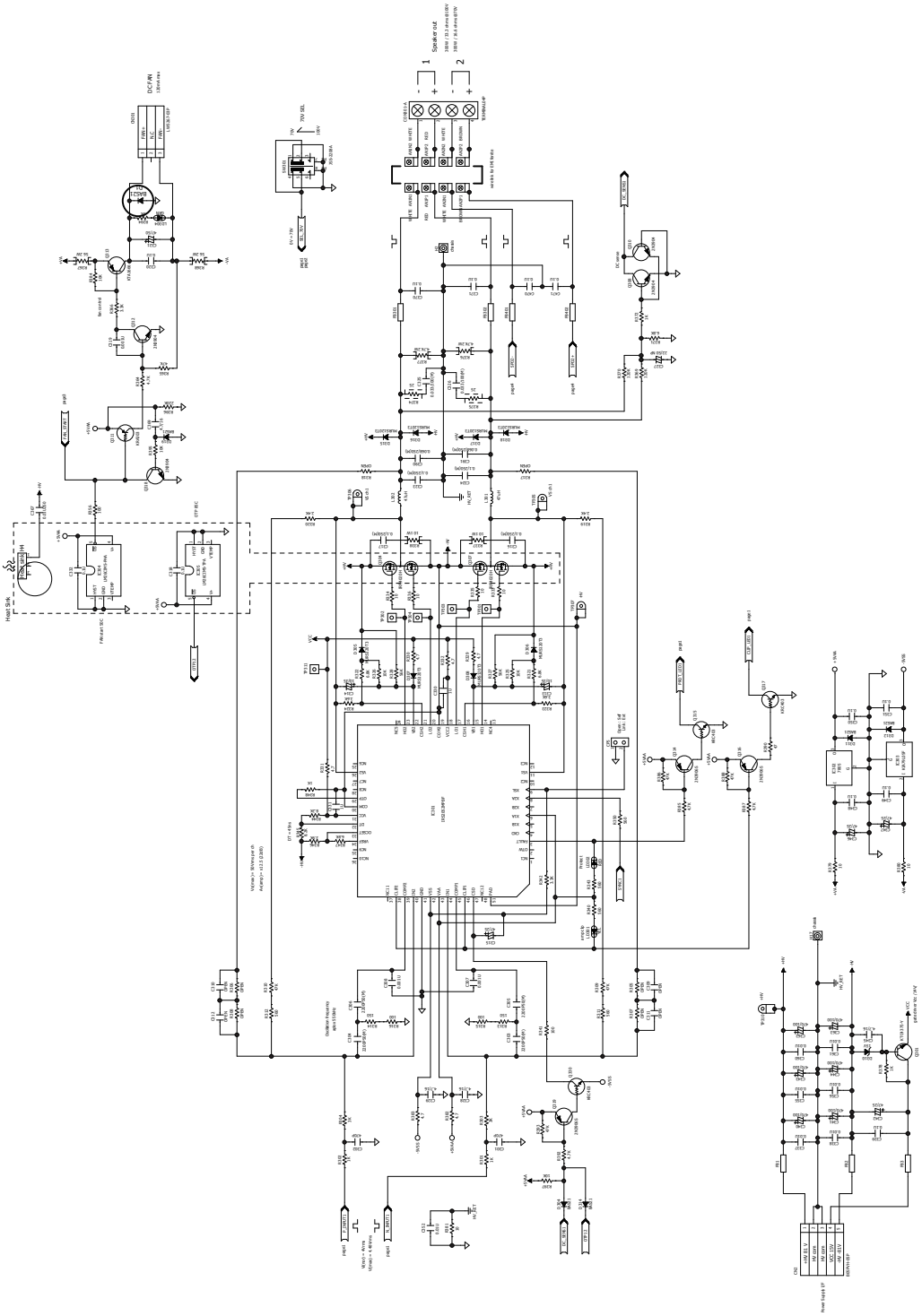

DPA-300T AMP

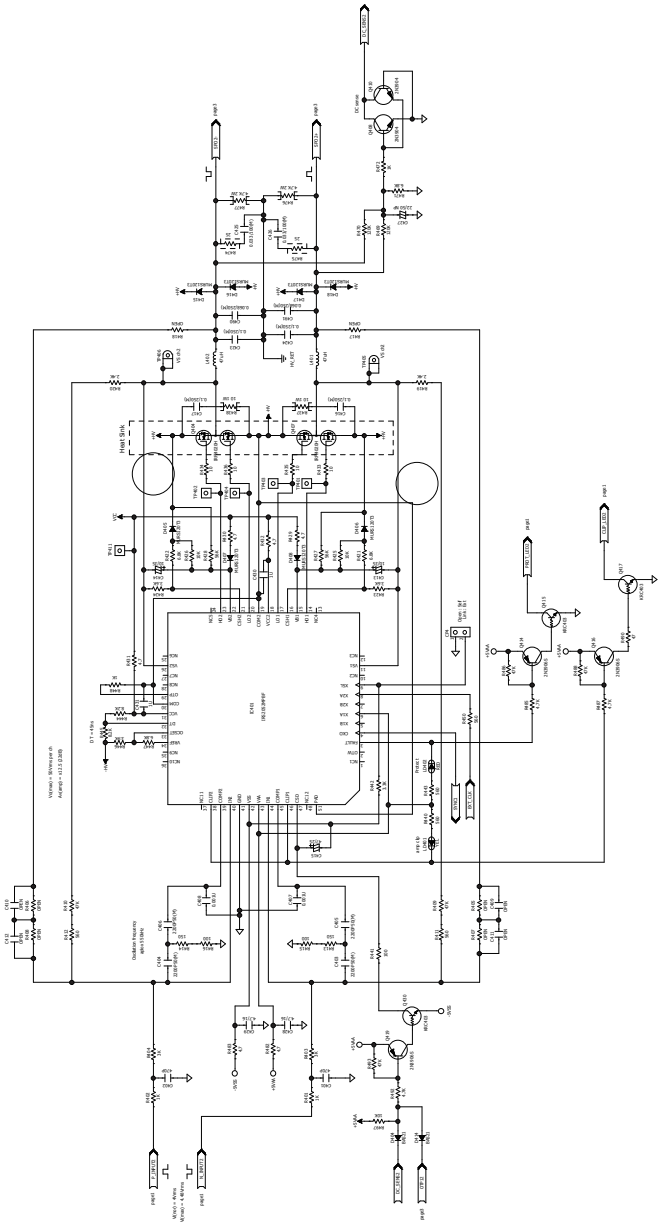

SCHEMATIC DIAGRAM

DPA-300T AMP

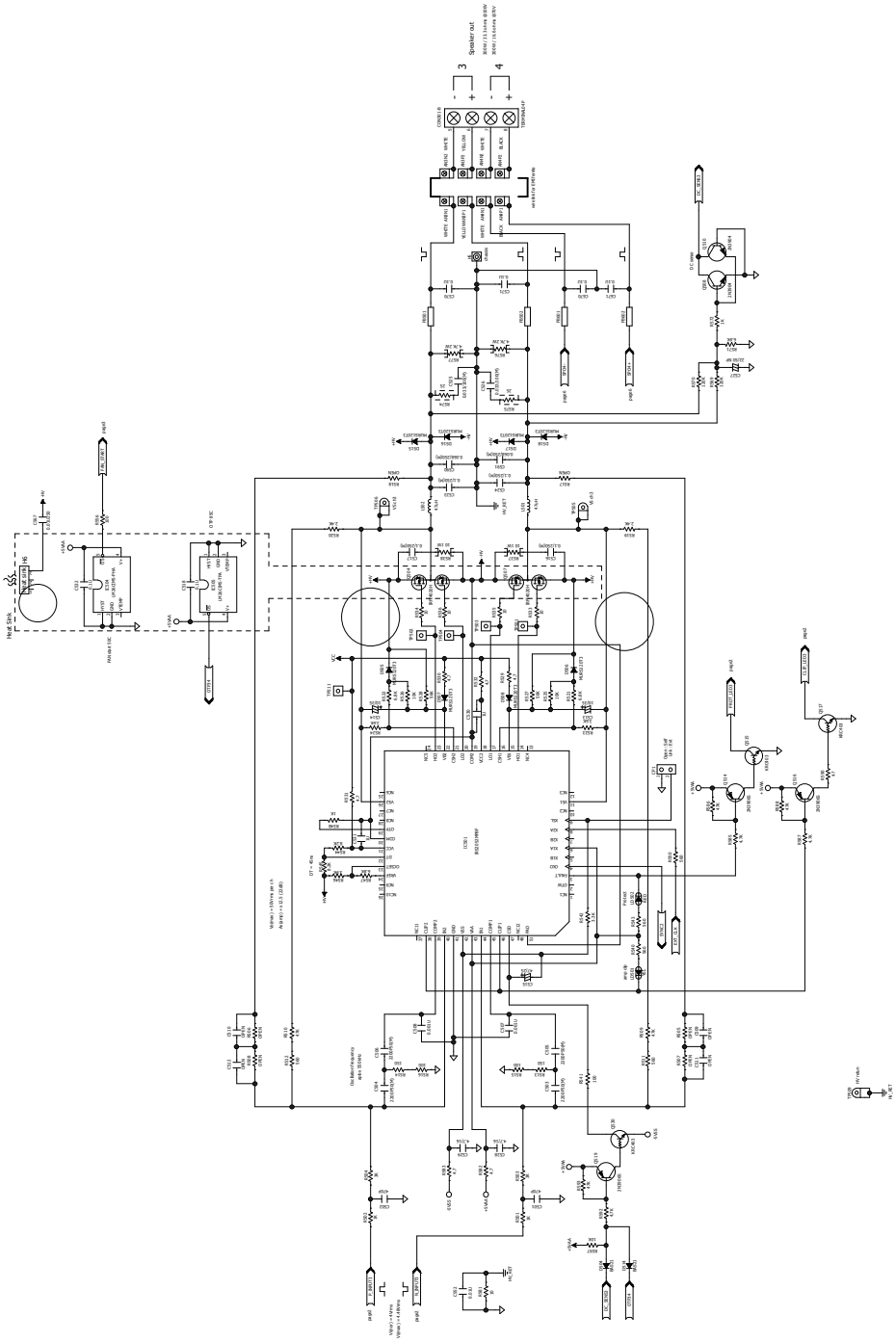

DPA-300T AMP

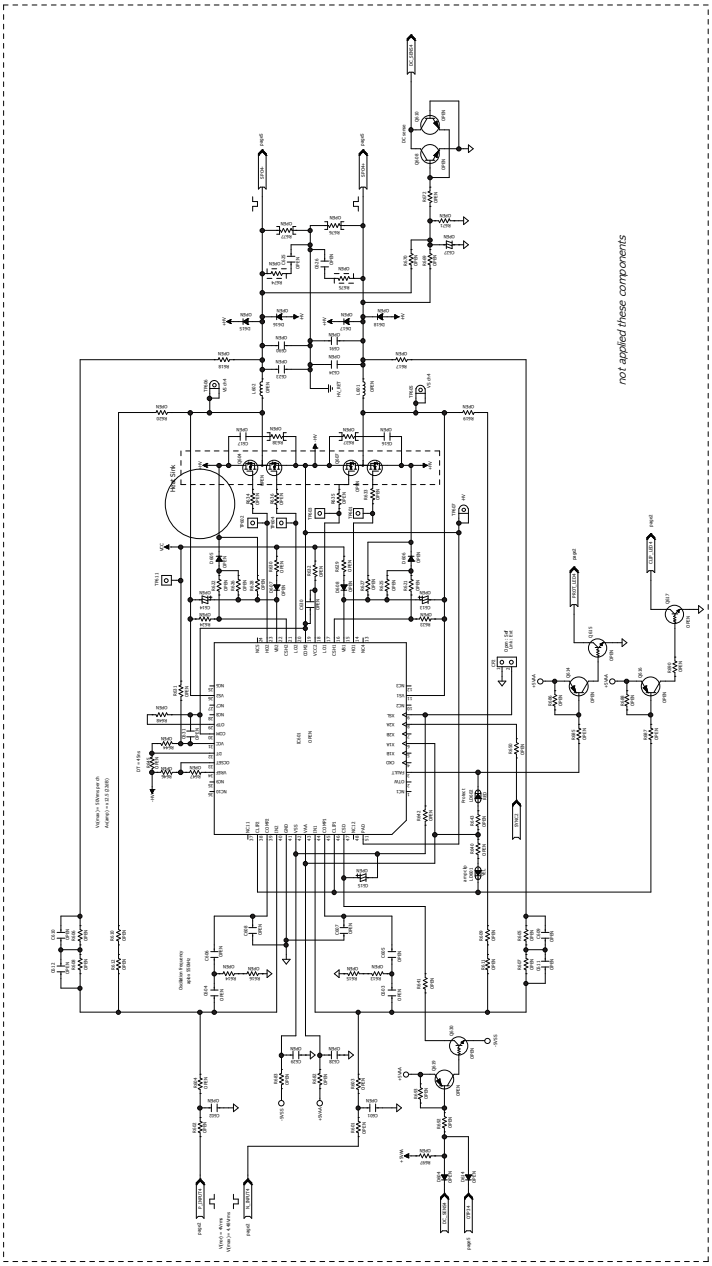

SCHEMATIC DIAGRAM

DPA-300T FRONT

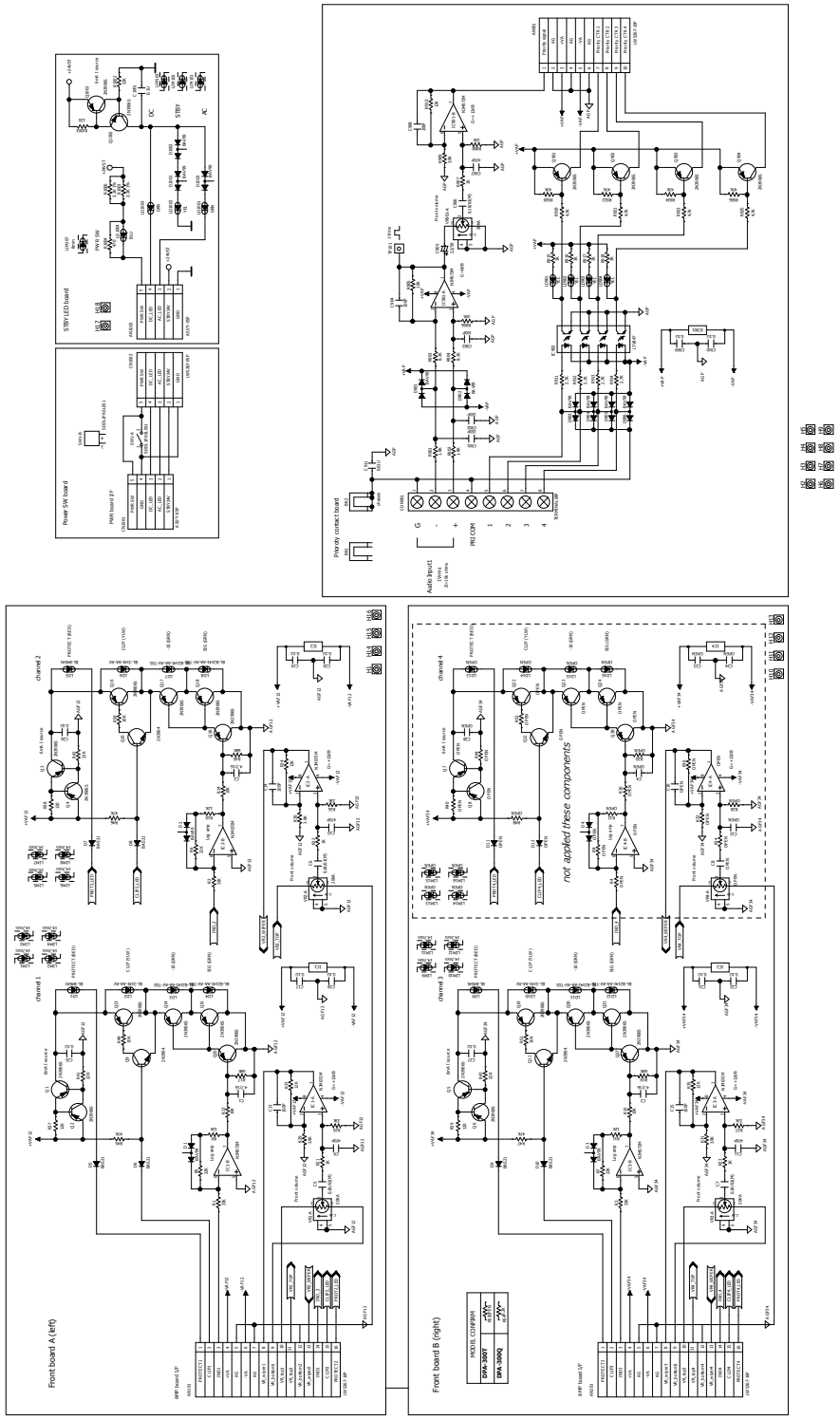

DPA-300T SMPS

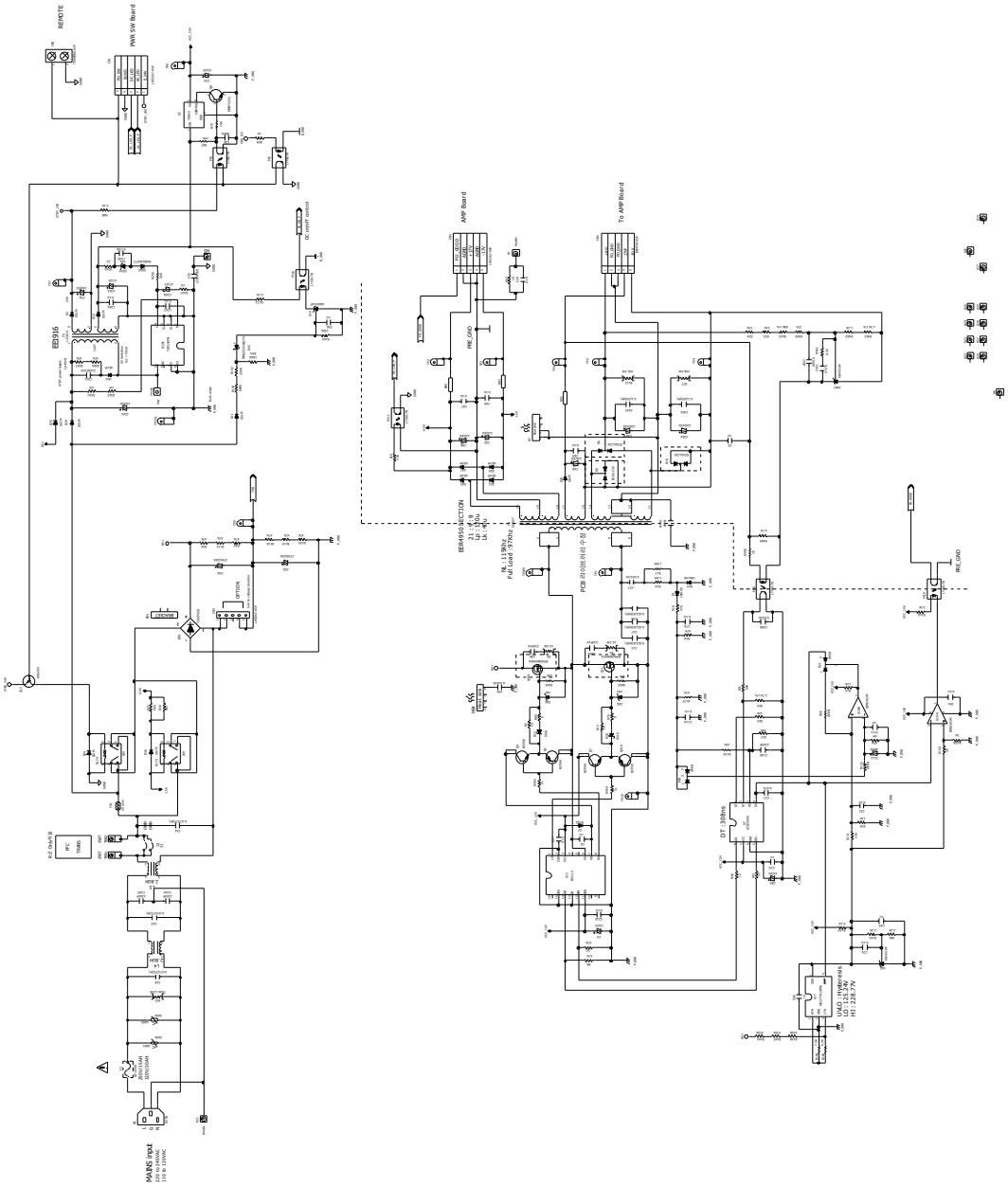

SCHEMATIC DIAGRAM

DPA-300T SMPS

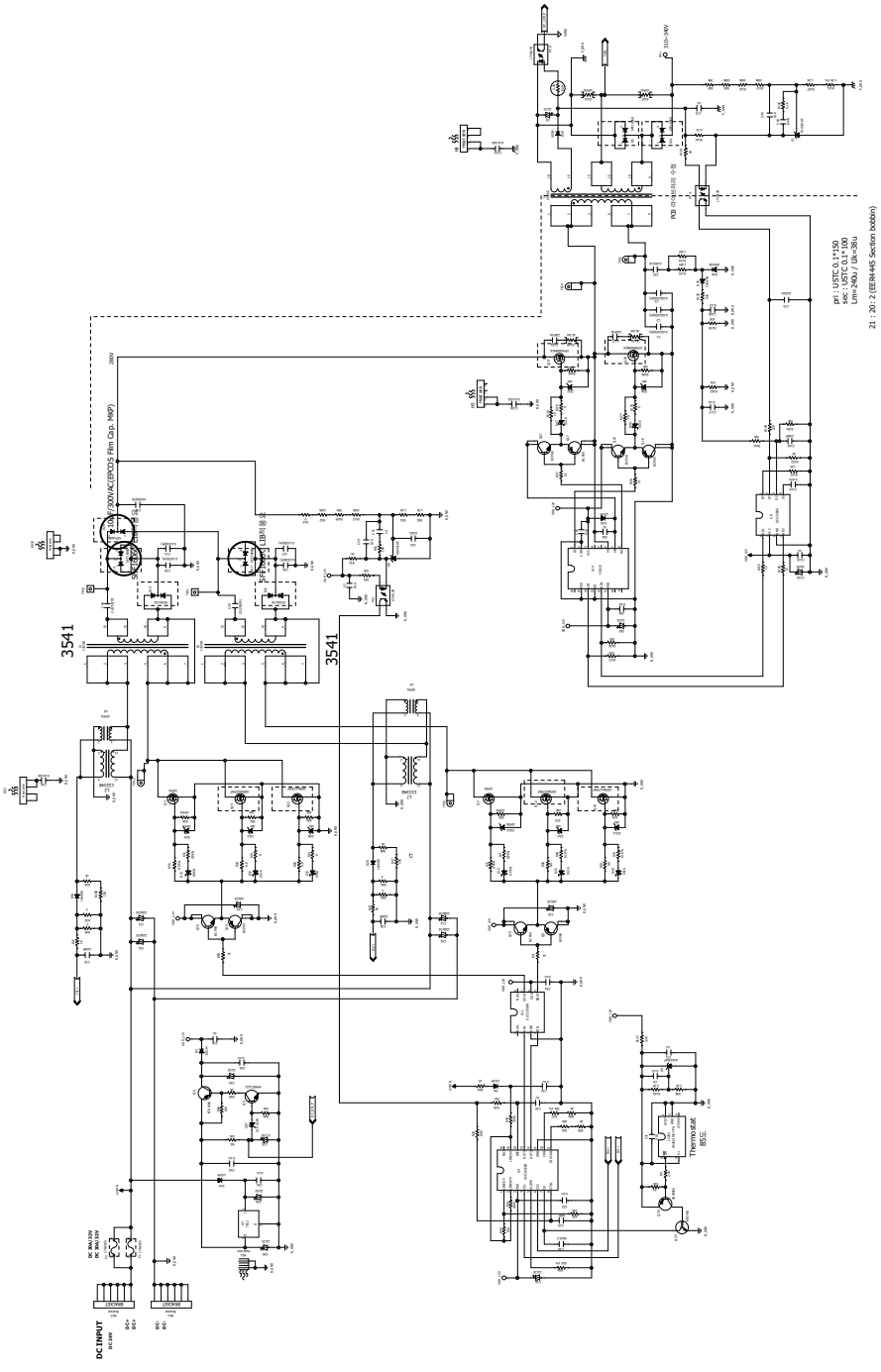

DPA-300Q AMP

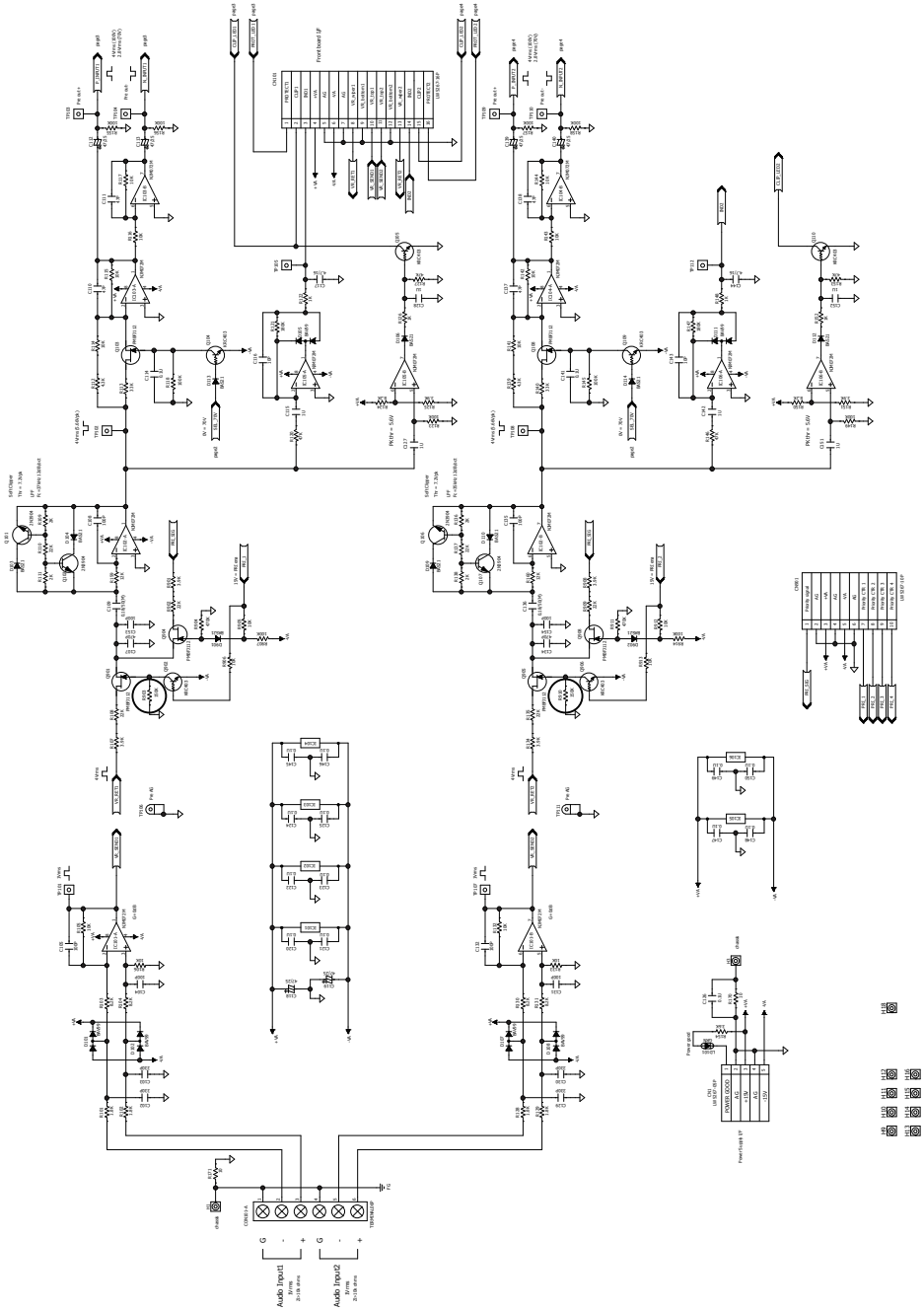

SCHEMATIC DIAGRAM

DPA-300Q AMP

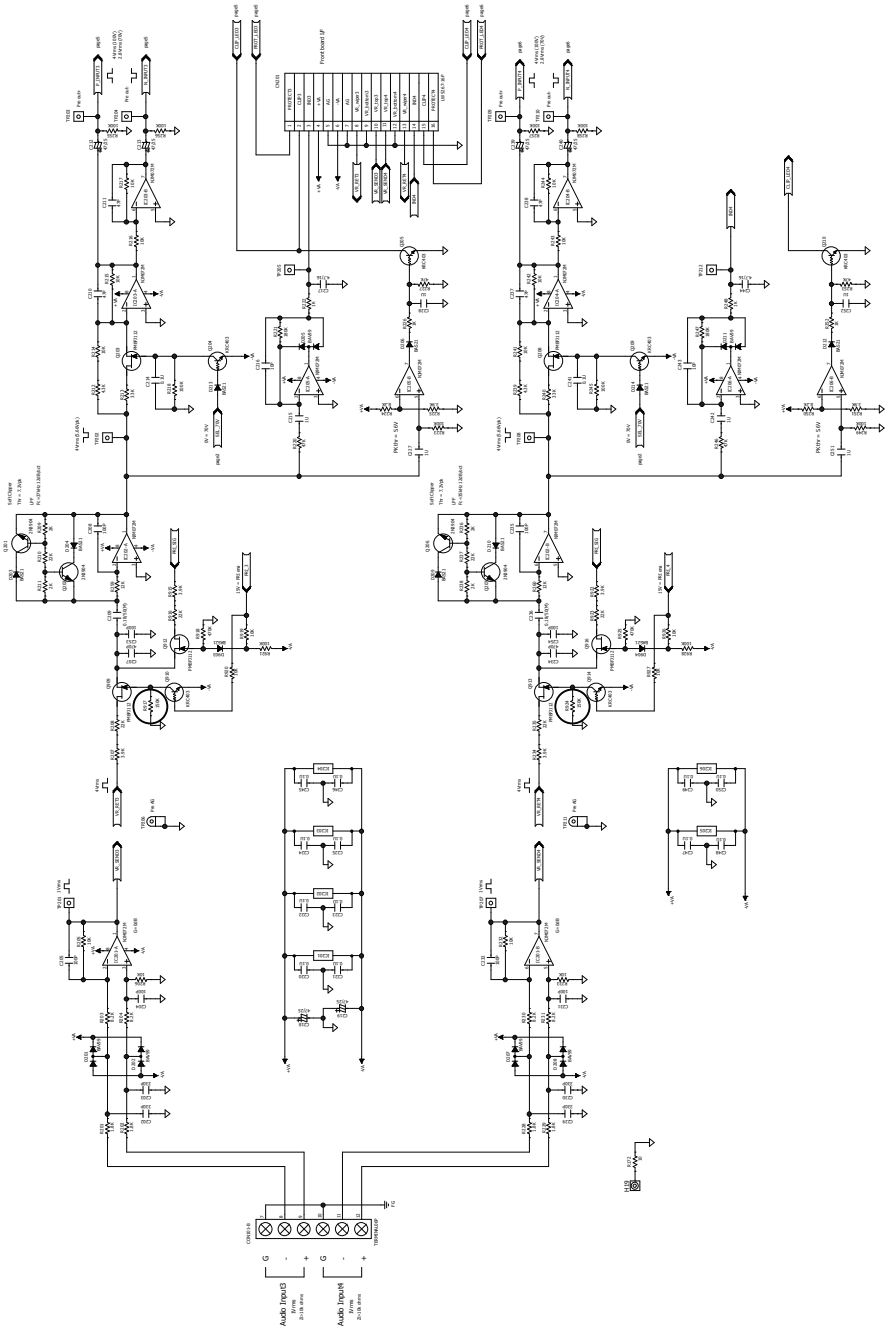

DPA-300Q AMP

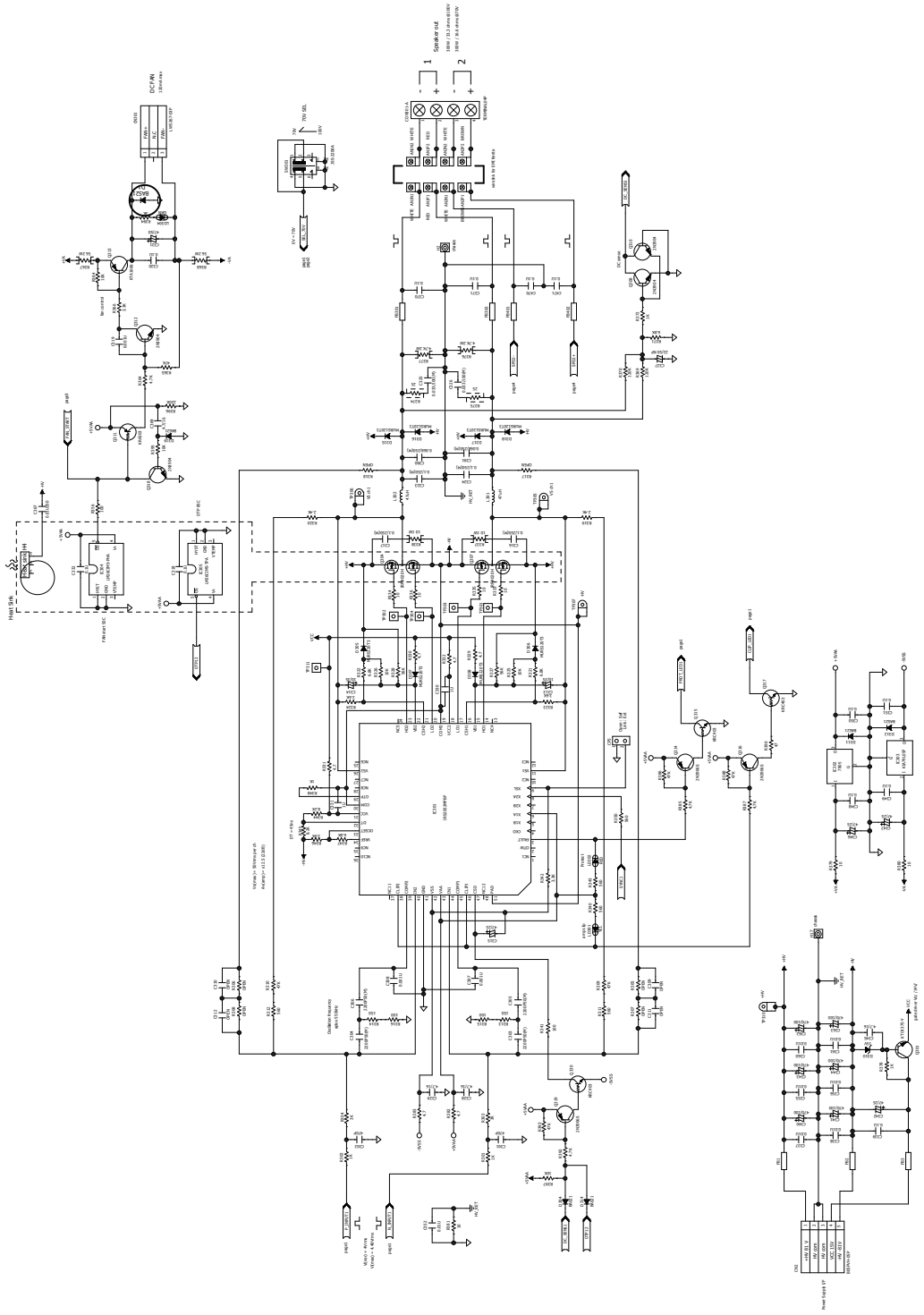

SCHEMATIC DIAGRAM

DPA-300Q AMP

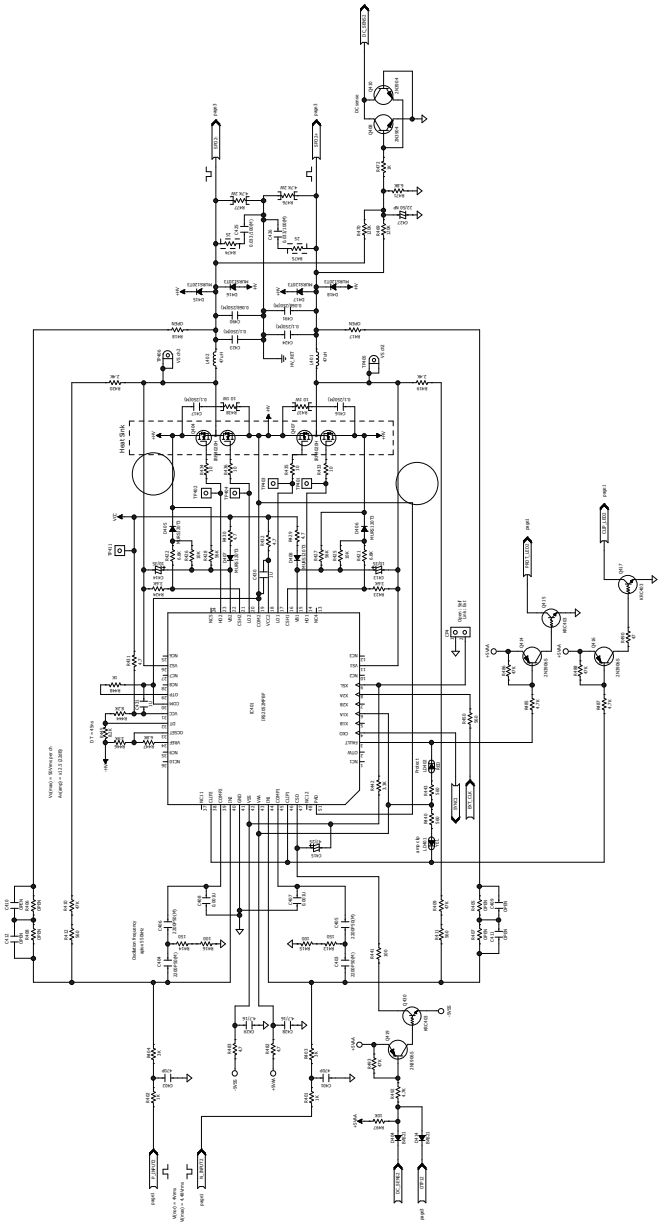

DPA-300Q AMP

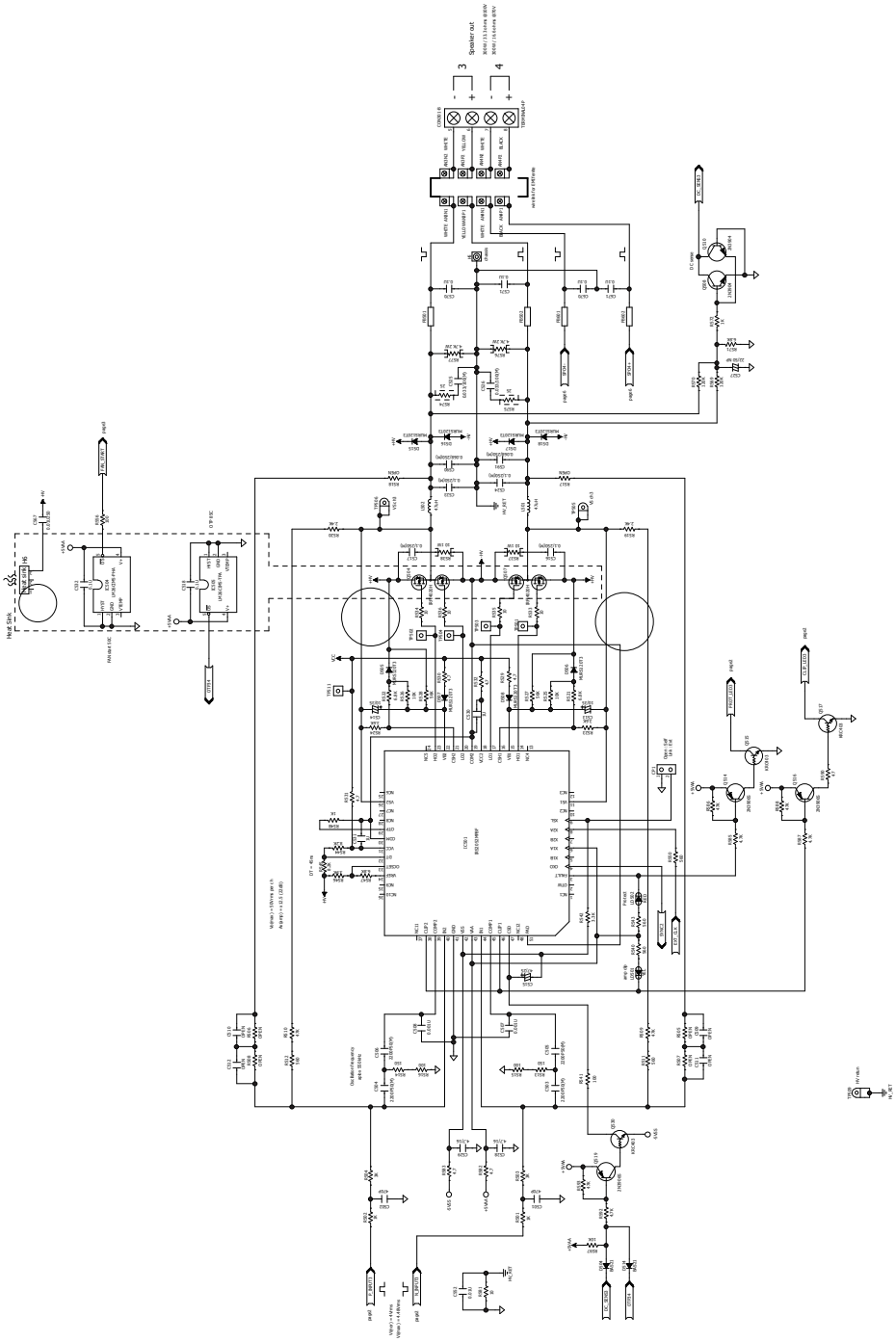

SCHEMATIC DIAGRAM

DPA-300Q AMP

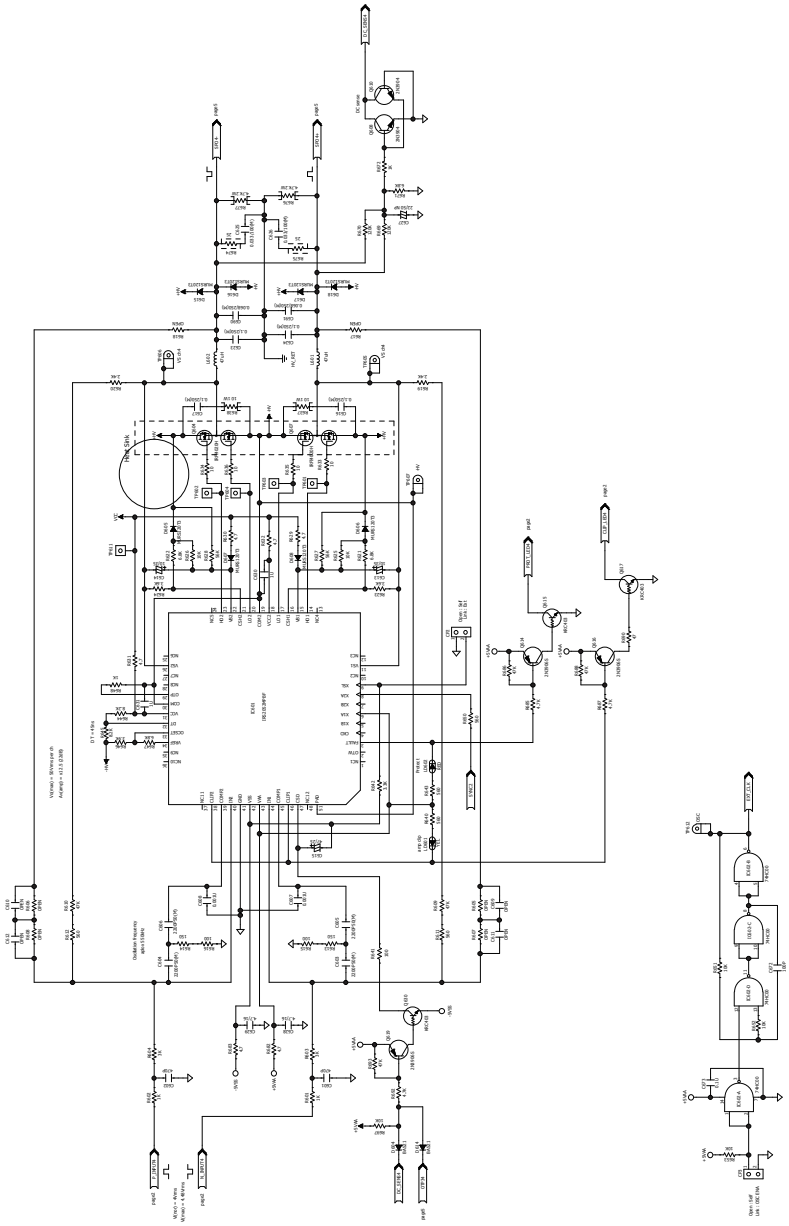

DPA-300Q FRONT

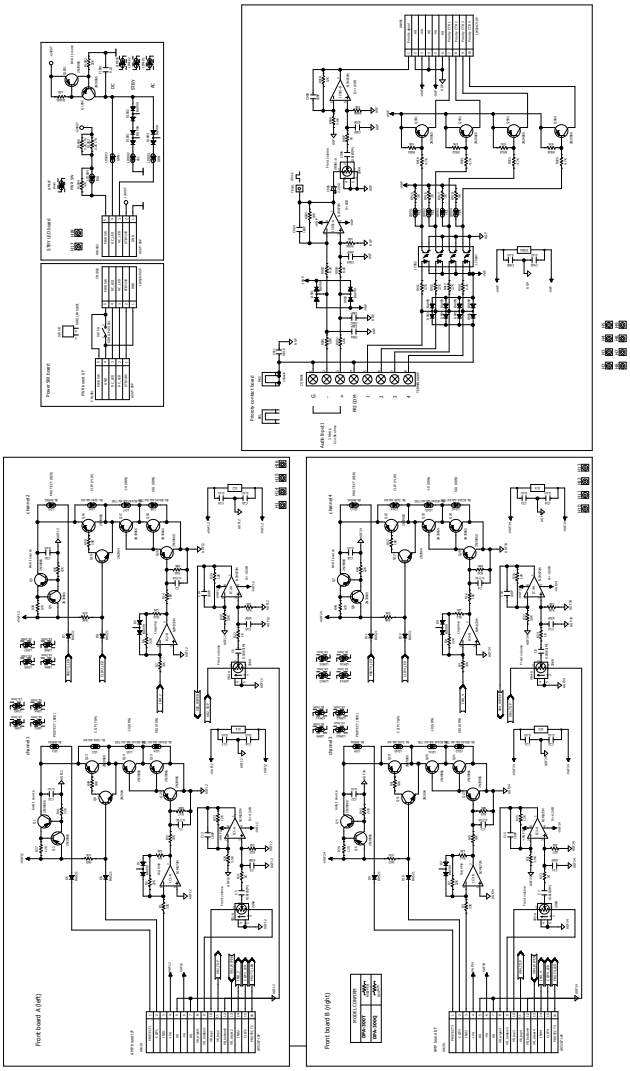

SCHEMATIC DIAGRAM

DPA-300Q SMPS

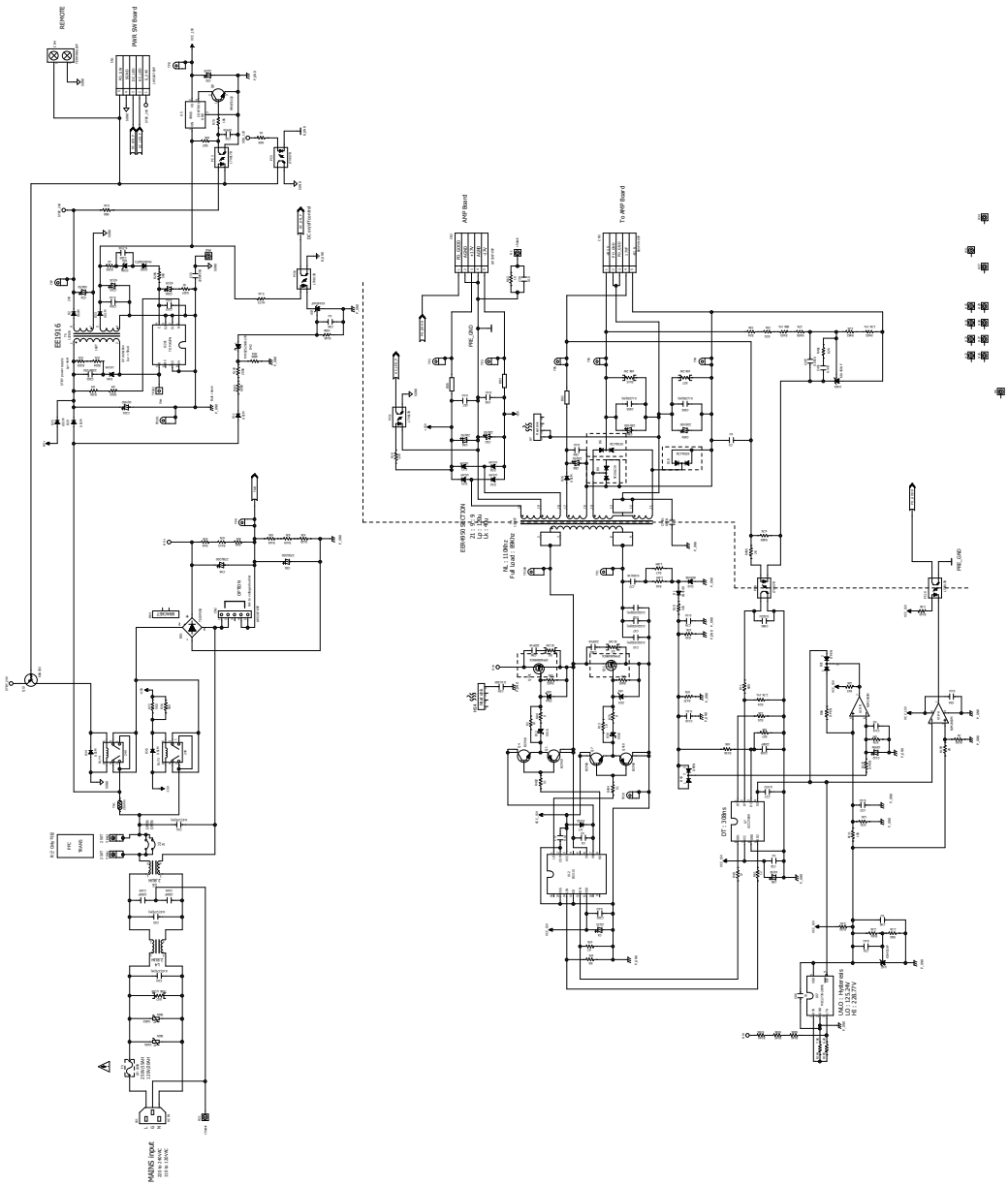

DPA-300Q SMPS

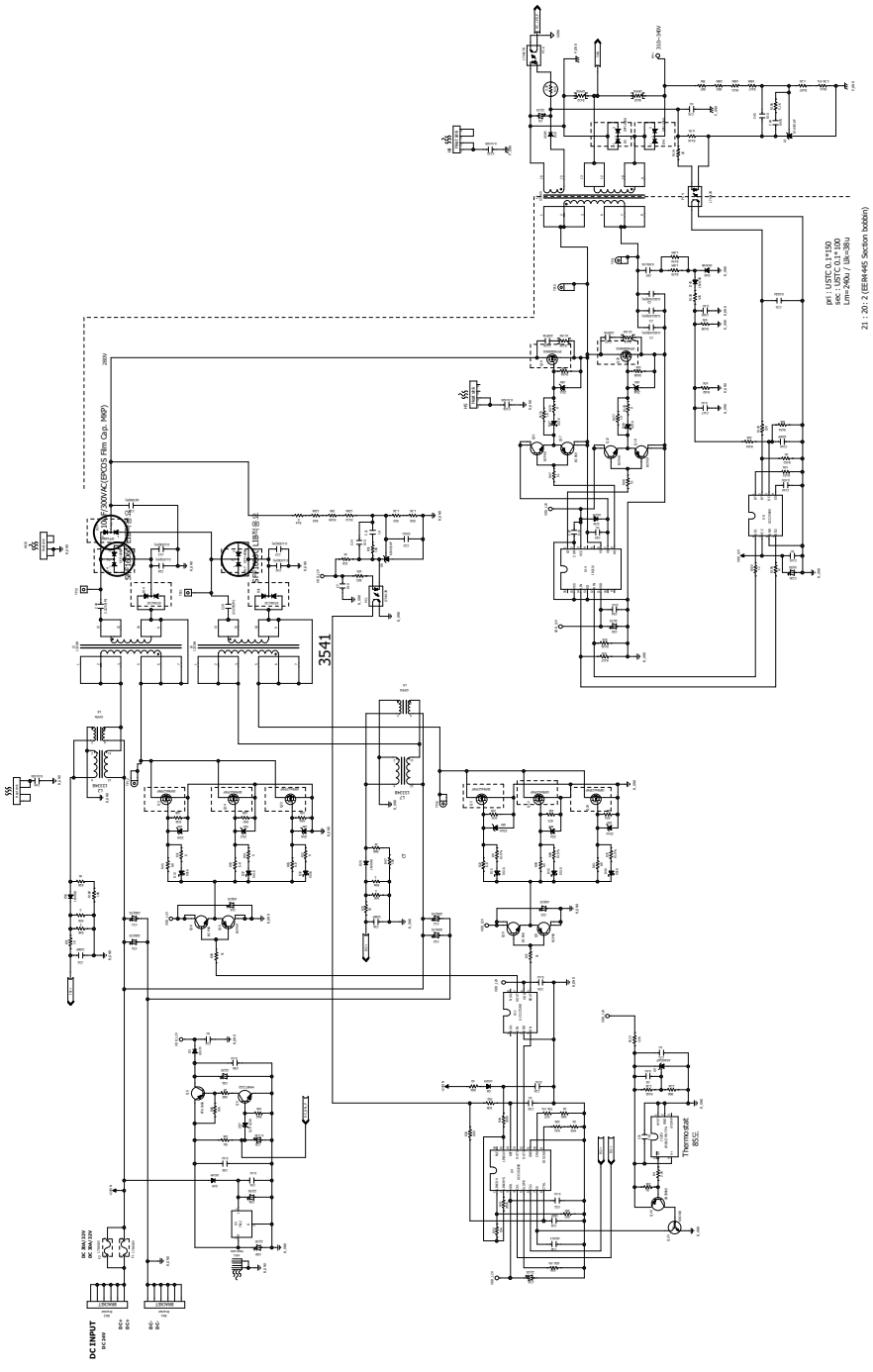

WIRING DIAGRAM

DPA-300T

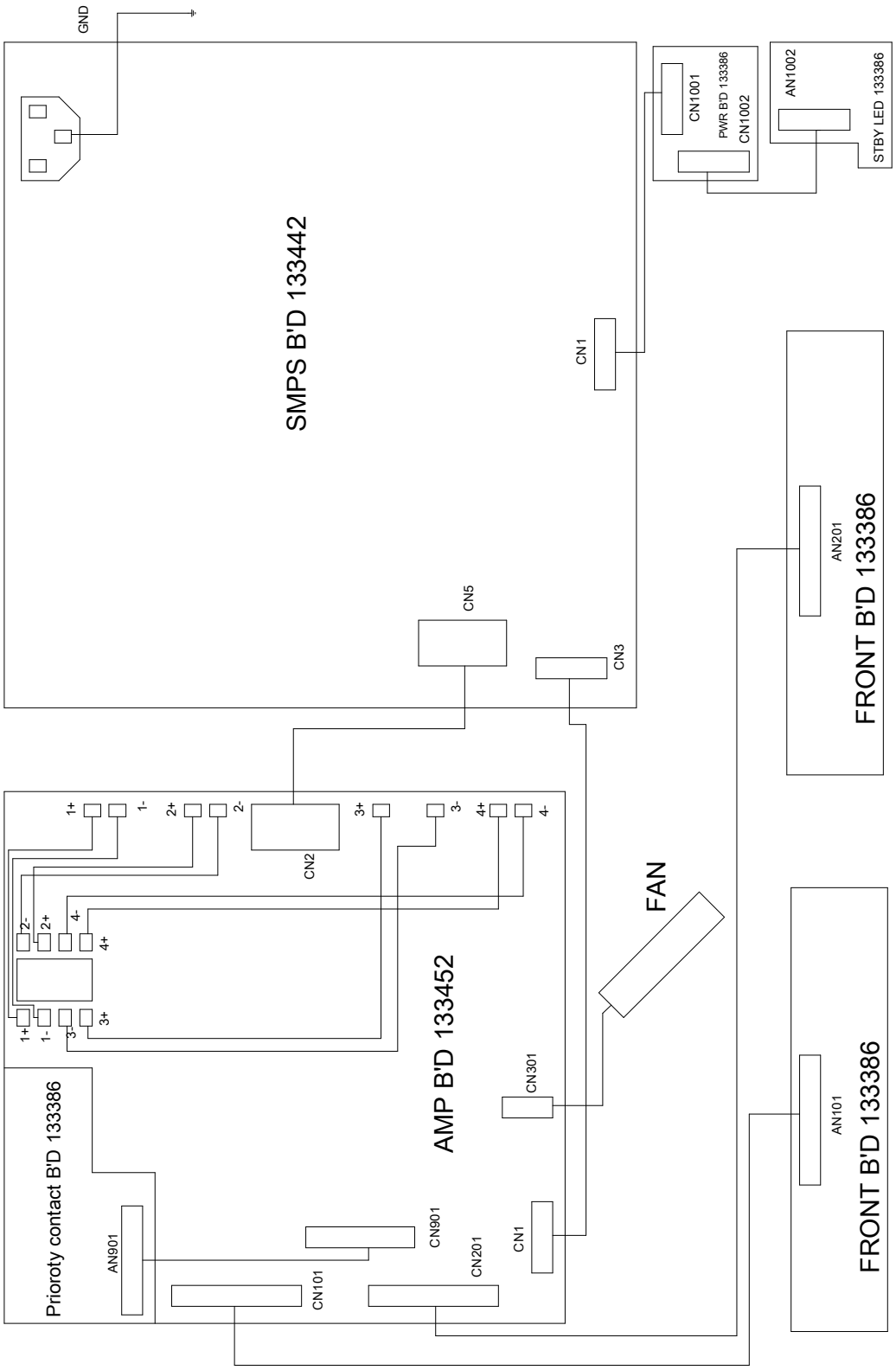

DPA-300Q

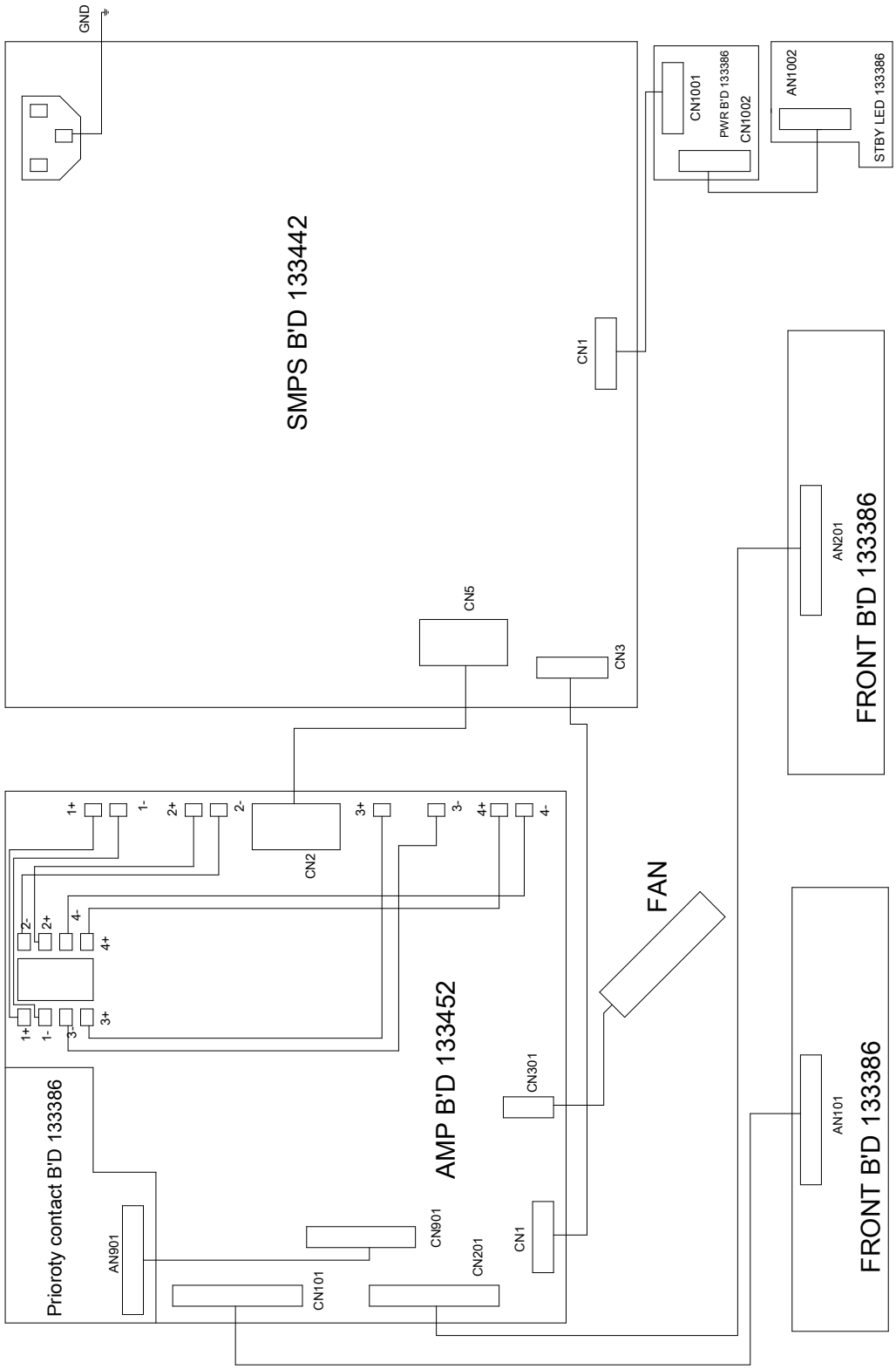
GND
SMPS B'D 133442
CN1
CN5
CN3
CN1001
PWR B'D 133386
CN1002
AN1002
STBY LED 133386
AN201
FRONT B'D 133386
AN101
FRONT B'D 133386
FAN
1+
1-
2+
2-
3+
3-
4+
4-
CN2
AMP B'D 133452
CN301
CN1
CN901
CN201
CN101
Prioroty contact B'D 133386
AN901

EXPLODED VIEW OF CABINET &
CHASSIS/MECHANICAL PARTS LIST

DPA-300T

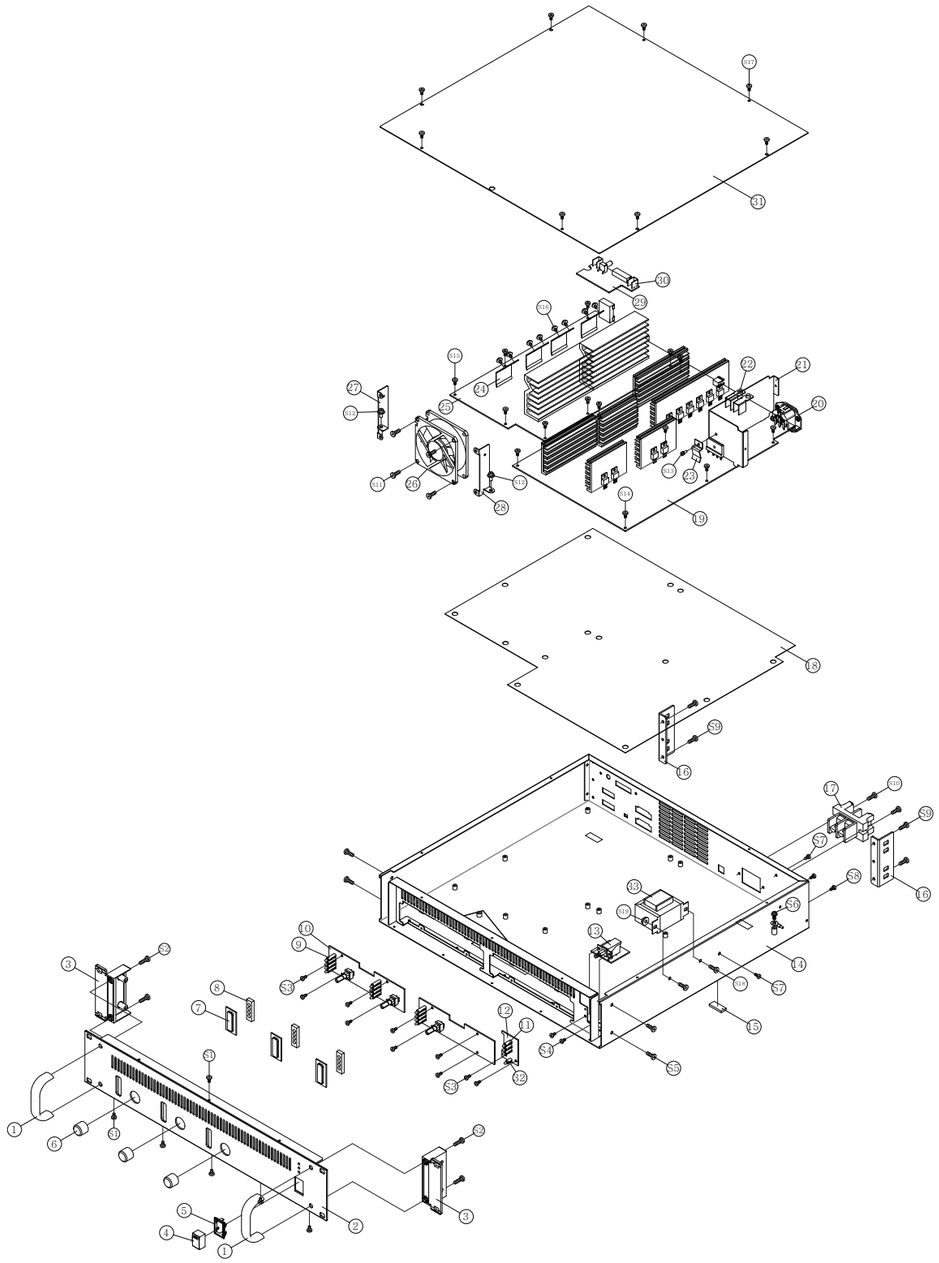

EXPLODE VIEW_DPA-300T (R)

NO	PART NAME	PART NUMBER	Q'TY	REMARKS
S19	NUT FLANG M4	114595	2	
S18	SCREW BM 4X8BK	114292	2	
S17	SCREW 3BTC 3X6B	114487	8	
S16	SCREW ASS'Y PM 4X8N	114412	4	
S15	SCREW BM 3X6N	114281	4	
S14	SCREW BM 3X6N	114281	8	
S13	ASS'Y SCREW PM 3X12N	130772	11	
S12	SCREW ASS'Y PM 4X8N	114412	2	
S11	SCREW BM 4X8BK	114292	4	
S10	SCREW 3BTC 4X14B	114501	2	
S9	SCREW 3BTC 4X8BK	114497	4	
S8	SCREW BM 3X6B	114280	2	
S7	SCREW 2BTC 3X8B	114465	2	
S6	SCREW WSAM 4X6N	114567	1	
S5	SCREW 2BTC 4X12B	114477	4	
S4	SCREW BM 3X6N	114281	2	
S3	SCREW 2BTC 3X8B	114465	4	
S2	SCREW BM 4X12B	114297	4	
S1	SCREW 3BTC 3X6B	114487	6	
35				
34				
33	TRANS		1	
32	LED LIMITER	114985	1	(H=8mm)
31	TOP COVER	100469	1	
30	BRACKET PCB	113528	2	
29	PRIORITY B'D		1	
28	BKT FAN "R"	113303	1	
27	FAN BKT "L"	113302	1	
26	FAN		1	
25	AMP B'D		1	
24	TR BKT	132433	4	
23	TR BKT	113431	1	
22	AC BKT	132374	2	
21	SHIELD COVER	132373	1	
20	AC INLET		1	
19	SMPS B'D		1	
18	INSULATION SHEET	133411	1	
17	AC TERMINAL		1	
16	B.K.T(Q-1000.COM)	100798	2	
15	FOOT	114114	2	
14	MAIN CHASSIS (DPA-300T)	132346	1	
13	POWER SW B'D		1	
12	STBY B'D		1	
11	LED LIMITER	114982	3	(H=11.5mm)
10	FRONT B'D		2	
9	LED LIMITER	114983	12	(H=14.7mm)
8	LED SPONGE	132370	3	
7	LED LENS	132369	3	
6	VR KNOB	124749	3	
5	BEZZEL PUSH	114705	1	
4	PUSH KNOB	114868	1	
3	GUIDE HANDLE	114879	2	
2	PANEL FRONT (DPA-300T)	2001317	1	
1	HANDLE,2U,BLACK	127710	2	

EXPLODED VIEW OF CABINET &
CHASSIS/MECHANICAL PARTS LIST

DPA-300Q

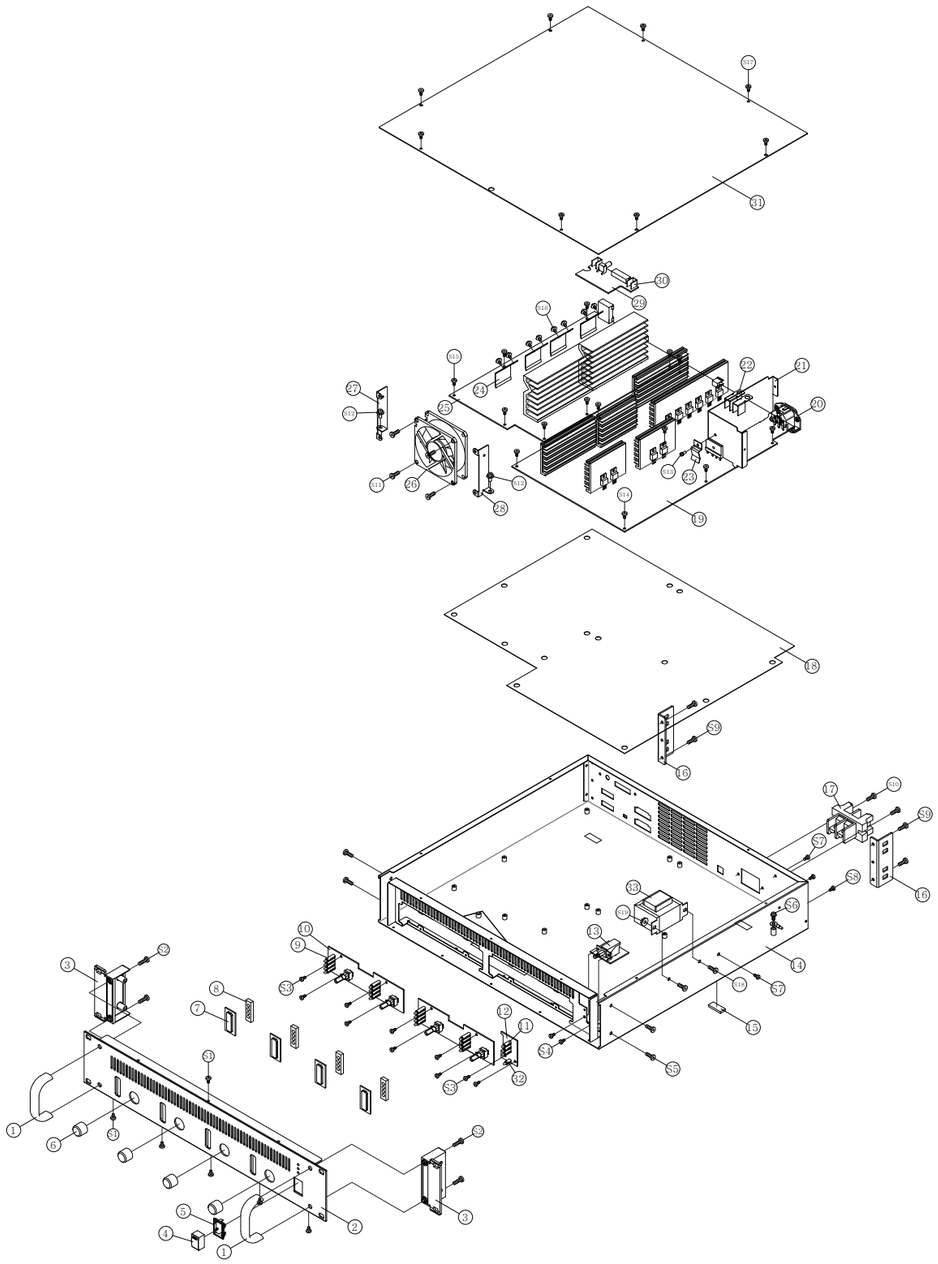

EXPLODE VIEW_DPA-300Q (R)

NO	PART NAME	PART NUMBER	Q'TY	REMARKS
S19	NUT FLANG M4	114595	2	
S18	SCREW BM 4X8BK	114292	2	
S17	SCREW 3BTC 3X6B	114487	8	
S16	SCREW ASS'Y PM 4X8N	114412	4	
S15	SCREW BM 3X6N	114281	4	
S14	SCREW BM 3X6N	114281	8	
S13	ASS'Y SCREW PM 3X12N	130772	11	
S12	SCREW ASS'Y PM 4X8N	114412	2	
S11	SCREW BM 4X8BK	114292	4	
S10	SCREW 3BTC 4X14B	114501	2	
S9	SCREW 3BTC 4X8BK	114497	4	
S8	SCREW BM 3X6B	114280	2	
S7	SCREW 2BTC 3X8B	114465	2	
S6	SCREW WSAM 4X6N	114567	1	
S5	SCREW 2BTC 4X12B	114477	4	
S4	SCREW BM 3X6N	114281	2	
S3	SCREW 2BTC 3X8B	114465	4	
S2	SCREW BM 4X12B	114297	4	
S1	SCREW 3BTC 3X6B	114487	6	
35				
34				
33	TRANS		1	
32	LED LIMITER	114985	1	(H=8mm)
31	TOP COVER	100469	1	
30	BRACKET PCB	113528	2	
29	PRIORITY B'D		1	
28	BKT FAN "R"	113303	1	
27	FAN BKT "L"	113302	1	
26	FAN		1	
25	AMP B'D		1	
24	TR BKT	132433	4	
23	TR BKT	113431	1	
22	AC BKT	132374	2	
21	SHIELD COVER	132373	1	
20	AC INLET		1	
19	SMPS B'D		1	
18	INSULATION SHEET	133411	1	
17	AC TERMINAL		1	
16	B,K,T(Q-1000,COM)	100798	2	
15	FOOT	114114	2	
14	MAIN CHASSIS (DPA-300Q)	132345	1	
13	POWER SW B'D		1	
12	STBY B'D		1	
11	LED LIMITER	114982	3	(H=11.5mm)
10	FRONT B'D		2	
9	LED LIMITER	114983	16	(H=14.7mm)
8	LED SPONGE	132370	4	
7	LED LENS	132369	4	
6	VR KNOB	124749	4	
5	BEZZEL PUSH	114705	1	
4	PUSH KNOB	114868	1	
3	GUIDE HANDLE	114879	2	
2	PANEL FRONT (DPA-300Q)	2001316	1	
1	HANDLE,2U,BLACK	127710	2	

www.inter-m.com
MADE IN KOREA
2014. 1