Service Manual

Digital Power Amplifier

DPA-300D/600D

inter M

CONTENTS

Specifications 1
Electrical Parts List 2
Top and Bottom View of P.C. Board 17
Block Diagram 29
Schematic Diagram 31
Wiring Diagram 47
Exploded View of Cabinet & Chassis / Mechanical Parts List 50

SPECIFICATIONS

		DPA-300D	DPA-600D
Rated Output Power (THD 0.1%, AES17)		300W x 2	600W x 2
Peak Power		350W/CH	680W/CH
Output Level/Impedance		100V/33.3Ω	100V/16.6Ω
		70V/16.3Ω	70V/8.1Ω
		49V/8Ω	69.3V/8Ω
Input Sensitivity		1V/10kΩ	
THD (AES17)	Rated Power	Less than 0.1%	
	1/3 Power	Less than 0.03%	
S/N (20kHz LPF)		More than 103dB	
Frequency Response (1W, ±3dB)		50Hz~20kHz	
Operating Temperature		-10°C ~ +40°C	
Operating Power		120VAC, 60Hz, 220-240VAC, 50/60Hz 24VDC	
Power Consumption (1/8 Power)		130W	250W
Weight (SET)		7.1kg/15.7lb	8.1kg/17.9lb
Dimensions (SET)		482(W) x 88(H) x 397(D)mm 19(W) x 3.5(H) x 15.6(D)in	482(W) x 88(H) x 450(D)mm 19(W) x 3.5(H) x 17.7(D)in

* Design and specification are subject to be changed for the improvement of product quality without pre notice.

ELECTRICAL PARTS LIST

REF	ITEM NO.	DEFINE	VALUE
DPA-300D AMP			
R170-171 R279-280			
R381	104234	"R10J/A,10"	10
R219-220 R319-320	104274	"R2KJ/A,2K"	2K
R227-228 R327-328	104347	"R56KJ/A,56K"	56K
R237-238 R337-338	104454	"R10J/1W/MF/T,10 1W"	10 1W
R267-268	104673	"R56J/2W/MO/T,56 2W"	56 2W
R274-275 R374-375	104745	"R25J/5W/CE,25"	25
"C112-113 C118-119			
C139-140 C215 C242			
C246-247 C315"	105508	"EC47U25M/RG/T,47/25"	47/25
C221	105511	"EC47U50M/SG/T,47/50"	47/50
C240-241 C243-244			
C262-263	105585	"EC470U100M/NXB,470/100"	470/100
C225-226 C325-326	105857	"MA0.033U100J/T,0.033/100(M)"	0.033/100(M)
C223-224 C323-324	105909	"MA0.1U250J/DEM/T,0.1/250(M)"	0.1/250(M)
C216-217 C316-317	105910	"MA0.1U250K/DEM/T,0.1/250(M)"	0.1/250(M)
C290-291 C390-391	105919	"MA0.068U250J/DEM/T,0.068/250(M)"	0.068/250(M)
C203-206 C303-306	105929	"MA2200P50M/MKS/T,2200P50(M)"	2200P50(M)
"TP106 TP111			
TP205-207			
TP209 TP305-307			
TP310 TP312"	106871	"TP/TP00325-21/T,TP00325-21"	TP00325-21
CN2	110495	"05P/B5P-VH/3.96/110495,B05PVH-05P"	B05PVH-05P
CP1-3	111330	"02P/53014/2,53014-02P"	53014-02P
CN201	111358	"03P/LW-5267/2.5,LW5267-03P"	LW5267-03P
CN1	111360	"05P/LW-5267/2.5,LW5267-05P"	LW5267-05P
CN901	111365	"10P/LW-5267/2.5,LW5267-10P"	LW5267-10P
CN101	111371	"16P/LW-5267/2.5,LW5267-16P"	LW5267-16P
SW201	112022	"SL/JSS-2208A,JSS-2208A"	JSS-2208A
Q211	118627	"PNP/KRA303/USM,KRA303"	KRA303
"Q104-105 Q109-110			
Q215 Q217			
Q230 Q315 Q317			
Q330 Q902 Q906"	118638	"NPN/KRC403/USM,KRC403"	KRC403
Q201	118643	"NPN/KTC4375-Y/SOT89,KTC4375-Y"	KTC4375-Y
Q213	118657	"PNP/KTA1666/SOT89,KTA1666"	KTA1666
Q214 Q216 Q219			
Q314 Q316 Q319	118663	"PNP/2N3906S/SOT23,2N3906S"	2N3906S
Q101-102 Q106-107			
Q208 Q210 Q212			
Q218 Q308 Q310	118672	"NPN/2N3904/SOT23,2N3904"	2N3904
IC202	118724	"7805/KIA/D-PAK,7805"	7805
IC101-106	118730	"NJM072M/DMP08P,NJM072M"	NJM072M
IC302	118926	"74HC00/SOP14P,74HC00"	74HC00
"D103-104 D106			
D109-110 D112-114			
D204 D211-212 D214			
D219-220 D304 D314			
D901-902"	119190	"D/BAS21/SOT23,BAS21"	BAS21
D101-102 D105			
D107-108 D111	119196	"D/BAV99/SOT23,BAV99"	BAV99
D205-208 D215-218			
D305-308 D315-318	119203	"D/MURS120T3/DO214AA,MURS120T3"	MURS120T3
LD101 LD204	119236	"LD/G/1608S/LTST-C190TGKT,LTST-C190TGKT"	LTST-C190TGKT
R233-236 R333-336	119346	"R10J/2012,10"	10
R215-216 R241 R256			

ELECTRICAL PARTS LIST

REF	ITEM NO.	DEFINE	VALUE
R315-316 R341 R356 "R122 R126 R148 R152 R201-202 R211-212 R248 R272 R278 R301-302 R311-312 R348 R372"	119353	"R100J/2012,100"	100
"R105-106 R114-117 R132-133 R141-144 R225-226 R284 R295 R297 R325-326 R351-353 R397 R905-906 R912-913"	119362	"R1KJ/2012,1K"	1K
R118 R123 R145 R149 R155-158 R907 R914	119367	"R10KJ/2012,10K"	10K
R159-160	119370	"R100KJ/2012,100K"	100K
R269-270 R369-370	119401	"R12KJ/2012,12K"	12K
R213-214 R313-314	119405	"R120KJ/2012,120K"	120K
R903 R910	119420	"R150J/2012,150"	150
R101-102 R128-129	119435	"R150KJ/2012,150K"	150K
R121 R147	119455	"R1.8KJ/2012,1.8K"	1.8K
R109 R111 R136 R138 R108 R110 R135	119466	"R180KJ/2012,180K"	180K
R137 R902 R909 R296 R203-204 R294	119473	"R2KJ/2012,2K"	2K
R303-304	119499	"R22KJ/2012,22K"	22K
R242 R266 R342	119502	"R220KJ/2012,220K"	220K
R113 R140 R154 R223-224	119548	"R3KJ/2012,3K"	3K
R323-324 "R107 R125 R134 R151 R246 R346 R901 R908"	119576	"R3.3KJ/2012,3.3K"	3.3K
R290 R390 R264 R285 R287	119580	"R33KJ/2012,33K"	33K
R292 R385 R387 R392 "R120 R127 R146 R153 R209-210 R265 R286 R288 R293 R309-310 R386 R388 R393"	119590	"R3.6KJ/2012,3.6K"	3.6K
R904 R911 R229-232 R282-283	119605	"R3.9KJ/2012,3.9K"	3.9K
R329-332 R382-383 R240 R243 R250	119617	"R47J/2012,47"	47
R340 R343 R350	119625	"R4.7KJ/2012,4.7K"	4.7K
R247 R347 R221-222 R271	119630	"R47KJ/2012,47K"	47K
R321-322 R371 R4 R103-104 R124 R130-131 R150	119635	"R470KJ/2012,470K"	470K
R244-245 R344-345	119645	"R4.7J/2012,4.7"	4.7
R112 R139	119670	"R560J/2012,560"	560
C219	119689	"R6.2KJ/2012,6.2K"	6.2K
C126 C239	119707	"R6.8KJ/2012,6.8K"	6.8K
	119747	"R8.2KJ/2012,8.2K"	8.2K
	119949	"R4.3KJ/2012,4.3K"	4.3K
	120237	"CE0.001U50J/3216,0.001U"	0.001U
	120247	"CE0.1U50Z/2012,0.1U"	0.1U

ELECTRICAL PARTS LIST

REF	ITEM NO.	DEFINE	VALUE
C115 C127-128 C142 C151-152 C230-231 C330-331	120251	"CE1U50Z/2012,1U"	1U
C117 C144 C228-229 C245 C269 C328-329	120348	"CE4.7U16M/3216,4.7/16"	4.7/16
C116 C143	120349	"CE10P50J/1608,10P"	10P
C104-105 C108 C131-132 C135 C153-154 C372	120352	"CE100P50J/2012,100P"	100P
C102-103 C129-130	120381	"CE330P50J/2012,330P"	330P
C110-111 C137-138	120389	"CE47P50J/2012,47P"	47P
C107 C134 C201-202 C301-302	120391	"CE470P50J/2012,470P"	470P
"C114 C120-125 C141 C145-150 C218 C220 C232 C248-251 C270-271 C318 C332 C370-371 C373"	120421	"CE0.1U50K/2012,0.1U"	0.1U
FB1-2 FB201-202 FB301-302	123776	"80OHM/BEAD/123776,80OHM"	80OHM
C237-238 C255-256 C260-261 C352	126494	"CE0.01U250K/2012,0.01U"	0.01U
C207-208 C307-308	126495	"CE0.001U250J/2012,0.001U"	0.001U
C213-214 C313-314	126715	"EC10U50M/RD,10/50"	10/50
C227 C327	127070	"EC100U10M/SHL/T,100/10 NP"	100/10 NP
D210	127303	"ZD/15V/Z02W/SOT23,15V"	15V
FB3	127462	"120OHM/BEAD/127462,120ohm"	120ohm
C106 C133	127554	"EC2.2U50M/NXB/T,2.2/50"	2.2/50
IC205 IC305	128200	"LM26CIM5-TPA/SOT23-5,LM26CIM5-TPA"	LM26CIM5-TPA
CON101	128201	"TER/BL/ME030-350/06H/128201,TERMINAL06P"	TERMINAL06P
Q103 Q108 Q901 Q904-905 Q908	129509	"N/PMBFJ112/SOT23,PMBFJ112"	PMBFJ112
C267 C366	129534	"CE0.01U250J/3216,0.01U250"	0.01U250
IC203	129536	"79L05F/KIA/SOT89,KIA79L05F"	KIA79L05F
R276-277 R376-377	129577	"R4.7KJ/2W/MF/T,4.7K 2W"	4.7K 2W
LD202 LD302	129968	"LD/R/1608/BL-HUE36A,BL-HUE36A"	BL-HUE36A
LD201 LD301	130293	"LD/Y/1608/BL-HKB36A,BL-HKB36A"	BL-HKB36A
Q204-207 Q304-307	130597	"N/IRFB5620PBF/TO220,IRFB5620PBF"	IRFB5620PBF
IC201 IC301	131763	"IRS2052MPBF/QFN48P/2,IRS2052MPBF"	IRS2052MPBF
CON201	132912	"TER/OQ0455510000G/04H/132912,TERMINAL04P"	TERMINAL04P
C109 C136	133535	"MA0.18U63J/CEM/T,0.18/63(M)"	0.18/63(M)
IC204 IC304	133640	"LM26CIM5-PHA/SOT23-5,LM26CIM5-PHA"	LM26CIM5-PHA
L201-202 L301-302	2001370	"47UH/37/2001370,47uH"	47uH
H4 H16	2001390	"HS/2001390/67,Heat sink"	Heat sink
DPA-300D FRONT			
IC902	103384	"PC/LTV847,LTV847"	LTV847
VR901	104992	"203A/09/RK09S1110011,20KA"	20KA
VR1-2	105055	"203A/09/RK09K11N0005,20KA"	20KA
CN1002	111360	"05P/LW-5267/2.5,LW5267-05P"	LW5267-05P
AN901	111365	"10P/LW-5267/2.5,LW5267-10P"	LW5267-10P
AN101	111371	"16P/LW-5267/2.5,LW5267-16P"	LW5267-16P
SW1	112178	"PW/SDDL1PASL051,SDDL1PASL051"	SDDL1PASL051
BK1-2	113528	"BK/113528,Bracket"	Bracket
LIM101-103	114982	"LIMITER/5.5/11.5/114982,11.5mm"	11.5mm
LIM1-8	114983	"LIMITER/5.5/14.7/114983,14.7mm"	14.7mm

ELECTRICAL PARTS LIST

REF	ITEM NO.	DEFINE	VALUE
LIM107	114985	"LIMITER/5.5/8/114985,8mm"	8mm
Q1-4 Q13-18 Q25-26			
Q901-904 Q1001-1002	118663	"PNP/2N3906S/SOT23,2N3906S"	2N3906S
Q9-10	118672	"NPN/2N3904/SOT23,2N3904"	2N3904
IC1-2 IC901	118730	"NJM072M/DMP08P,NJM072M"	NJM072M
D5-8	119190	"D/BAS21/SOT23,BAS21"	BAS21
D1-2 D901-906			
D1001-1003	119196	"D/BAV99/SOT23,BAV99"	BAV99
R21-22 R907	119362	"R1KJ/2012,1K"	1K
R13-14	119366	"R10KJ/1608,10K"	10K
R49-50 R905-906	119367	"R10KJ/2012,10K"	10K
R37-38 R1001	119393	"R120J/2012,120"	120
R9-10 R33-34 R910	119401	"R12KJ/2012,12K"	12K
R901-902	119455	"R1.8KJ/2012,1.8K"	1.8K
R1003 R1006	119495	"R2.2KF/3216,2.2K 1%"	2.2K 1%
R5-6 R41-42 R1002	119499	"R22KJ/2012,22K"	22K
R911-914	119527	"R2.7KJ/2012,2.7K"	2.7K
R915-918	119548	"R3KJ/2012,3K"	3K
R1-2 R25-26 R908	119580	"R33KJ/2012,33K"	33K
R29-30 R909	119605	"R3.9KJ/2012,3.9K"	3.9K
R1004	119620	"R470J/2012,470"	470
R919 R921 R923 R925	119625	"R4.7KJ/2012,4.7K"	4.7K
R45-46 R920 R922			
R924 R926	119630	"R47KJ/2012,47K"	47K
R17-18	119711	"R68KJ/2012,68K"	68K
R903-904	119747	"R8.2KJ/2012,8.2K"	8.2K
C1-2	120348	"CE4.7U16M/3216,4.7/16"	4.7/16
C13-14 C903-904 C908	120352	"CE100P50J/2012,100P"	100P
C901-902	120381	"CE330P50J/2012,330P"	330P
C9-10 C907	120391	"CE470P50J/2012,470P"	470P
C17-20 C25-26			
C909-910 C1001	120421	"CE0.1U50K/2012,0.1U"	0.1U
LD1004	126148	"LD/B/3T/SLB1381N-UZ,SLB1381N-UZ"	SLB1381N-UZ
C911	126494	"CE0.01U250K/2012,0.01U"	0.01U
C905	127554	"EC2.2U50M/NXB/T,2.2/50"	2.2/50
LD1 LD5	129892	"LD/R/3T/BL-B4541,BL-B4541"	BL-B4541
LD2 LD6 LD1002	130016	"LD/Y/3T/BL-3141-AA-AV,BL-3141-AA-AV"	BL-3141-AA-AV
LD3-4 LD7-8			
LD1001 LD1003	130018	"LD/G/3.1T/BL-B2141,BL-B2141-AA-AV-T05"	BL-B2141-AA-AV-T05
CON901	130135	"TER/OQ0812510000G/08H/130135,TERMINAL08P"	TERMINAL08P
LD901-904	130293	"LD/Y/1608/BL-HKB36A,BL-HKB36A"	BL-HKB36A
AN1002 CN1001	133349	"05P/ASSY/2.5/133349,ASS'Y-05P"	ASS'Y-05P
C5-6 C906	133535	"MA0.18U63J/CEM/T,0.18/63(M)"	0.18/63(M)
DPA-300D SMPS			
U9	103061	"7812/KIA,7812"	7812
VAR1-2	103422	"ZNR/361/INR14D361,360V"	360V
TH1	103435	"10/M/10A/160T/-40~180C/DSC-10D-30,10 ohm"	10 ohm
R57	104453	"R750KJ/1/2W/MF/A,750K 1/2W"	750K 1/2W
R3 R5	104518	"R10J/2W/MO/T,10 2W"	10 2W
R77 R97-98 R115			
R162-163	104537	"R10KJ/2W/MO/T,10K 2W"	10K 2W
R100 R111	104543	"R0.1J/3W/MO,0.1 3W"	0.1 3W
R471	104567	"R15KJ/1W/MO/T,15K 1W"	15K 1W
R160-161 R164-167	104592	"R220J/2W/MO/T,220 2W"	220 2W
R72	104634	"R330J/2W/MO/T,330 2W"	330 2W
C62 C66 C68	105351	"EC220U50M/RD,220/50"	220/50

ELECTRICAL PARTS LIST

REF	ITEM NO.	DEFINE	VALUE
C4 C7 C11 C14 C55			
C70 C73 C81	105462	"EC22U25M/RG/T,22/25"	22/25
C74	105463	"EC22U50M/SHL/T,22/50"	22/50
C203 C206	105508	"EC47U25M/RG/T,47/25"	47/25
C121	105548	"EC4.7U50M/RG/T,4.7/50"	4.7/50
C71 C103 C113 C116	105625	"EC2200U35M/RD,2200/35"	2200/35
C46 C202	105793	"CE2200P250M/AC,2200P250"	2200P250
C117	105825	"MA0.1U200J/T,0.1/200(M)"	0.1/200(M)
C455-456	105909	"MA0.1U250J/DEM/T,0.1/250(M)"	0.1/250(M)
C461	105933	"MA3900P250J/CEM/T,3900P250(M)"	3900P250(M)
CX1 CX3	105992	"MA1U275K/AC,1/275(M)"	1/275(M)
TP1-10 TP16 TP19			
TP201 TP209	106871	"TP/TP00325-21/T,TP00325-21"	TP00325-21
CN5	110495	"05P/B5P-VH/3.96/110495,B05PVH-05P"	B05PVH-05P
CN4	110850	"TER/BL/010/02H/110850,TERMINAL02P"	TERMINAL02P
CN1-2	111360	"05P/LW-5267/2.5,LW5267-05P"	LW5267-05P
F3	111579	"FUSE/GF-205B,GF-205B"	GF-205B
JK1	111737	"ACIN/SS-7B-1-09,AC IN"	AC IN
F1	112598	"20/5A/250V/T/KUCJ/112598,T5A/250V"	T5A/250V
Q13	118627	"PNP/KRA303/USM,KRA303"	KRA303
Q20	118657	"PNP/KTA1666/SOT89,KTA1666"	KTA1666
PC1-6 PC9 PC16	118872	"PC/LTV817B,LTV817B"	LTV817B
D1 D10 D46-47	119171	"D/1N4148/SOT23,1N4148"	1N4148
D21 D43	119194	"D/KDS184/SOT23,KDS184"	KDS184
D204	119210	"ZD/10V/BZX84C/SOT23,10V"	10V
R147 R150	119341	"R1J/3216,1"	1
R36 R56 R156 R207	119346	"R10J/2012,10"	10
R63 R175	119348	"R10J/3216,10"	10
R70	119353	"R100J/2012,100"	100
R69 R138-139			
R148-149	119362	"R1KJ/2012,1K"	1K
"R2 R66-67 R89 R108			
R129 R134 R136 R154			
R177 R403 R405 R461"	119367	"R10KJ/2012,10K"	10K
R78	119373	"R1MJ/2012,1M"	1M
R201-202	119374	"R1MJ/3216,1M"	1M
R48 R61	119388	"R12J/2012,12"	12
R76 R116 R462	119396	"R1.2KJ/2012,1.2K"	1.2K
R15 R79	119401	"R12KJ/2012,12K"	12K
R113	119405	"R120KJ/2012,120K"	120K
R463	119408	"R1.3KF/2012,1.3K 1%"	1.3K 1%
R99	119408	"R1.3KJ/2012,1.3K"	1.3K
R155	119425	"R1.5KJ/3216,1.5K"	1.5K
R92 R131 R135 R490	119428	"R15KJ/2012,15K"	15K
R128 R140	119436	"R150KJ/3216,150K"	150K
R124 R126-127			
R132-133 R159	119473	"R2KJ/2012,2K"	2K
R91	119476	"R20KJ/2012,20K"	20K
R205	119487	"R22J/2012,22"	22
R114	119492	"R220J/2012,220"	220
R82 R101	119497	"R2.2KJ/2012,2.2K"	2.2K
R25	119499	"R22KJ/2012,22K"	22K
R27	119531	"R27KJ/2012,27K"	27K
R158	119548	"R3KJ/2012,3K"	3K
R10 R110	119576	"R3.3KJ/2012,3.3K"	3.3K
R33-34	119581	"R33KJ/3216,33K"	33K
R93	119586	"R330KJ/2012,330K"	330K

ELECTRICAL PARTS LIST

REF	ITEM NO.	DEFINE	VALUE
R469	119625	"R4.7KJ/2012,4.7K"	4.7K
R7-8 R137	119630	"R47KJ/2012,47K"	47K
R19-20 R203-204	119631	"R47KJ/3216,47K"	47K
R54 R144-145	119636	"R470KJ/3216,470K"	470K
R117	119644	"R4.7J/3216,4.7"	4.7
R68 R130 R172	119655	"R5.1KJ/2012,5.1K"	5.1K
R125	119658	"R51KJ/2012,51K"	51K
R206	119670	"R560J/2012,560"	560
R105	119689	"R6.2KJ/2012,6.2K"	6.2K
R64	119701	"R680J/2012,680"	680
R152	119727	"R750J/2012,750"	750
R104	119732	"R7.5KJ/2012,7.5K"	7.5K
R174	119770	"R100KF/3216,100K 1%"	100K 1%
R103	119822	"R68KF/3216,68K 1%"	68K 1%
R87	119823	"R75KF/2012,75K 1%"	75K 1%
R118 R176 R183			
R402 R404	119955	"R51J/2012,51"	51
R40 R71 R80			
R178 R409	120063	"R0J/3216,0"	0
C118	120235	"CE0.001U50J/2012,0.001U"	0.001U
C115	120247	"CE0.1U50Z/2012,0.1U"	0.1U
C5-6 C31-32 C49			
C86-87 C96 C111			
C114 C133	120251	"CE1U50Z/2012,1U"	1U
C109	120275	"CE2200P50K/2012,2200P"	2200P
C108	120283	"CE0.22U50Z/2012,0.22U"	0.22U
C27 C451	120315	"CE0.47U50Z/2012,0.47U"	0.47U
C490	120346	"CE0.33U25Z/2012,0.33/25"	0.33/25
C205	120348	"CE4.7U16M/3216,4.7/16"	4.7/16
C100 C102	120352	"CE100P50J/2012,100P"	100P
C15	120363	"CE180P50J/2012,180P"	180P
C61 C84	120417	"CE0.01U50K/2012,0.01U"	0.01U
"C17 C39 C57 C63			
C65 C67 C69			
C72 C75-76 C82-83			
C88 C94 C97			
C101 C106 C110			
C122 C137 C204			
C207 C220"	120421	"CE0.1U50K/2012,0.1U"	0.1U
ZD1	122227	"ZD/UZ5.1V/0.2W/USC,5.1V 0.2W"	5.1V 0.2W
C107	122241	"CE820P50J/2012,820P"	820P
Q4 Q8 Q19	124670	"NPN/MMBT2222/SOT23,MMBT2222"	MMBT2222
D6 D9 D18 D51-54	125194	"D/SF20LC30,SF20LC30"	SF20LC30
C58 C134 C136	125212	"CE0.1U100K/3216,0.1U100"	0.1U100
C79	125212	"CE0.1U100M/3216,0.1U"	0.1U
C77	125719	"CE0.001U1KK/Y5P/T,0.001/1K"	0.001/1K
C104-105	125720	"CE2200P400M/SD,2200P"	2200P
U8 U10 U15 U401	125843	"KIA431AF/SOT89,KIA431AF"	KIA431AF
C95 C120	125848	"EC100U50M/NXB/T,100/50"	100/50
C8 C48	125849	"EC220U100M/NXA,220/100"	220/100
BD8	125866	"BD/TS15P05G,TS15P05G"	TS15P05G
RLY3-4	125868	"24V/881H-1AH-C/S2L1/2,24V"	24V
R142	125872	"R200KJ/3216,200K"	200K
D12 D35 D37-38 D58	125880	"SD/SS16/SMA,SS16"	SS16
C457	126495	"CE0.001U250J/2012,0.001U"	0.001U
R24	126498	"R2.7KF/2012,2.7K 1%"	2.7K 1%
R11	127195	"R560F/2012,560 1%"	560 1%

ELECTRICAL PARTS LIST

REF	ITEM NO.	DEFINE	VALUE
BD2-3 BD6	127462	"120OHM/BEAD/127462,120ohm"	120ohm
L1-2	127463	"100OHM/BEAD/127463,100ohm"	100ohm
C85 C112	127711	"EC10U50M/NXB/T,10/50"	10/50
F4	128336	"FUSE/178.6165,178.6165"	178.6165
U5	128383	"78R15/KIA/API,78R15"	78R15
C64	129356	"CE10U6.3K/2012,10U6.3"	10U6.3
Q7	129519	"PNP/KTN2907AS/SOT23,KTN2907AS"	KTN2907AS
C125-132	129521	"CE2200P1KM/E/T,2200P1K"	2200P1K
U18	129542	"NJM2403M/DMP08P,NJM2403M"	NJM2403M
C98 C402	130523	"CE220P1KK/Y5R,220P1K"	220P1K
D33	131633	"D/UF5408,UF5408"	UF5408
U3	132173	"TOP242,TOP242"	TOP242
U13	132334	"UCC27324D/SOIC08P/2,UCC27324D"	UCC27324D
U12	132336	"IR2113/SOIC16P/2,IR2113"	IR2113
U7	132340	"UCC25600/SOIC08P/2,UCC25600"	UCC25600
L9-10	132367	"PT/132367,132367"	132367
BK4	132373	"BK/132373,Bracket"	Bracket
BK9-10	132374	"BK/132374,Bracket"	Bracket
"D2 D7 D11 D22-23 D25-27 D30 D34 D36 D39-42 D44-45 D48-50 D55-56 D205"	132384	"SD/US1M/SMA,US1M"	US1M
R16-17	132392	"R1.8MJ/3216,1.8M"	1.8M
R168	132482	"R120KJ/3216,120K"	120K
R169 R459	132483	"R27KJ/3216,27K"	27K
C34-35	132799	"EC470U250M/TDC,470/250"	470/250
Q11 Q401	132801	"N/IPP60R125C6/TO220,IPP60R125C6"	IPP60R125C6
ZD2-5 ZD8	132803	"ZD/18V/MMBZ5248B/SOT23,18V"	18V
T4	132805	"T/132805,132805"	132805
U1	132811	"ICE2PCS03G/SO08P/2,ICE2PCS03G"	ICE2PCS03G
D29	132812	"SD/RFX10TF6S,RFX10TF6S"	RFX10TF6S
Q14	132815	"N/SPP20N60C3/TO220,SPP20N60C3"	SPP20N60C3
C201	132816	"EC10U450M/NFC,10/450"	10/450
C119	132817	"EC220U450M/TDC,220/450"	220/450
C78	132818	"MA0.47U630J/MP,0.47/630(M)"	0.47/630(M)
T2	132819	"T/132819,132819"	132819
T1	132820	"T/132820,132820"	132820
R13 R18	132822	"R3.9MJ/3216,3.9M"	3.9M
R96 R179	132827	"R6.8J/3216,6.8"	6.8
U17	132828	"MIC2778-2BM5/SOT23-5,MIC2778-2BM5"	MIC2778-2BM5
Q1 Q15 Q22 Q26	132830	"NPN/BCP68/SOT223,BCP68"	BCP68
Q12 Q16 Q21 Q25	132831	"PNP/BCP69/SOT223,BCP69"	BCP69
R143	132845	"R680KJ/3216,680K"	680K
R90 R121-123	132849	"R240KJ/3216,240K"	240K
C1-2	132860	"MA0.022U630J/MP,0.022/630(M)"	0.022/630(M)
Q18 Q23	132863	"N/IRFB4332PBF/TO220,IRFB4332PBF"	IRFB4332PBF
C123-124	132883	"MA2.2U250J/MP,2.2/250(M)"	2.2/250(M)
R146	132932	"R430KJ/3216,430K"	430K
BK2	132986	"HS/132986/55,Heat sink"	Heat sink
H32	132987	"HS/132987/55,Heat sink"	Heat sink
H4	132988	"HS/132988/55,Heat sink"	Heat sink
BK7	132989	"HS/132989/55,Heat sink"	Heat sink
T6-7	133090	"PT/133090/24V,133090"	133090
R119	133259	"R5.49KF/2012,5.49K 1%"	5.49K 1%
F2	133284	"ATO/30A/32V/F/UL/133284,30A/32V"	30A/32V
U2	133312	"UCC28220D/SOIC16P/2,UCC28220D"	UCC28220D
L4-5	133335	"6MH/25/CHOKE/LF19-F06M,6mH"	6mH

ELECTRICAL PARTS LIST

REF	ITEM NO.	DEFINE	VALUE
DPA-300D WIRING			
	112598	"FUSE,20MM,T,5A,250V,K/U/CS/J"	FUSE
	113303	"FAN BKT ""R"""	
	113302	"FAN BKT ""L"""	
	114182	DC FAN(3110KL-05W-B70-F04)	MOTOR/FAN
	133089	"DC TERMNAL BLOCK,2P,BI-16PTHC-02P "	CONNECTOR WAFER/TERMINAL
	133389	"CON ASS'Y,FL,16P,5264,5264,AWG26,430mm "	CONNECTOR ASS'Y
	133391	"CON ASS'Y,FL,10P,5264,5264,AWG26,150mm "	CONNECTOR ASS'Y
	133390	"CON ASS'Y,DS,5P,5239,5239,AWG18,150mm "	CONNECTOR ASS'Y
	133388	"CON ASS'Y,FL,5P,5264,5264,AWG26,250mm "	CONNECTOR ASS'Y
DPA-600D AMP			
C102-103 C129-130 C104-105 C108 C131-132 C135	120381	"CE330P50J/2012,330P"	330P
C153-154 C372	120352	"CE100P50J/2012,100P"	100P
C106 C133	127554	"EC2.2U50M/NXB/T,2.2/50"	2.2/50
C107 C134 C201-202 C301-302	120391	"CE470P50J/2012,470P"	470P
C109 C136	133535	"MA0.18U63J/CEM/T,0.18/63(M)"	0.18/63(M)
C110-111 C137-138	120389	"CE47P50J/2012,47P"	47P
"C112-113 C118-119 C139-140 C215 C242 C246-247 C315"	105508	"EC47U25M/RG/T,47/25"	47/25
"C114 C120-125 C141 C145-150 C218 C220 C232 C248-251 C270-271 C318 C332 C370-371 C373"	120421	"CE0.1U50K/2012,0.1U"	0.1U
C115 C127-128 C142 C151-152 C230-231 C330-331	120251	"CE1U50Z/2012,1U"	1U
C116 C143	120349	"CE10P50J/1608,10P"	10P
C117 C144 C228-229 C245 C269 C328-329	120348	"CE4.7U16M/3216,4.7/16"	4.7/16
C126 C239	120247	"CE0.1U50Z/2012,0.1U"	0.1U
C203-206 C303-306	105929	"MA2200P50M/MKS/T,2200P50(M)"	2200P50(M)
C207-208 C307-308	126495	"CE0.001U250J/2012,0.001U"	0.001U
C213-214 C313-314	126715	"EC10U50M/RD,10/50"	10/50
C216-217 C316-317	105910	"MA0.1U250K/DEM/T,0.1/250(M)"	0.1/250(M)
C219	120237	"CE0.001U50J/3216,0.001U"	0.001U
C221	105511	"EC47U50M/SG/T,47/50"	47/50
C223-224 C323-324	105909	"MA0.1U250J/DEM/T,0.1/250(M)"	0.1/250(M)
C225-226 C325-326	105857	"MA0.033U100J/T,0.033/100(M)"	0.033/100(M)
C227 C327	127070	"EC100U10M/SHL/T,100/10 NP"	100/10 NP
C237-238 C255-256 C260-261 C352	126494	"CE0.01U250K/2012,0.01U"	0.01U
C240-241 C243-244 C262-263	105585	"EC470U100M/NXB,470/100"	470/100
C267 C366	129534	"CE0.01U250J/3216,0.01U250"	0.01U250
C292-293 C392-393	105914	"MA0.22U250J/DEM/T,0.22/250(M)"	0.22/250(M)
CN1	111360	"05P/LW-5267/2.5,LW5267-05P"	LW5267-05P
CN101	111371	"16P/LW-5267/2.5,LW5267-16P"	LW5267-16P
CN2	110495	"05P/B5P-VH/3.96/110495,B05PVH-05P"	B05PVH-05P
CN201	111358	"03P/LW-5267/2.5,LW5267-03P"	LW5267-03P

ELECTRICAL PARTS LIST

REF	ITEM NO.	DEFINE	VALUE
CN901	111365	"10P/LW-5267/2.5,LW5267-10P"	LW5267-10P
CON101	128201	"TER/BL/ME030-350/06H/128201,TERMINAL06P"	TERMINAL06P
CON201	132912	"TER/OQ0455510000G/04H/132912,TERMINAL04P"	TERMINAL04P
CP1-3	111330	"02P/53014/2,53014-02P"	53014-02P
D101-102 D105			
D107-108 D111	119196	"D/BAV99/SOT23,BAV99"	BAV99
"D103-104 D106			
D109-110 D112-114			
D204 D211-212 D214			
D219-220 D304 D314			
D901-902"	119190	"D/BAS21/SOT23,BAS21"	BAS21
D205-208 D215-218			
D305-308 D315-318	119203	"D/MURS120T3/DO214AA,MURS120T3"	MURS120T3
D210	127303	"ZD/15V/Z02W/SOT23,15V"	15V
FB1-2 FB201-202			
FB301-302	123776	"80OHM/BEAD/123776,80OHM"	80OHM
FB3	127462	"120OHM/BEAD/127462,120ohm"	120ohm
H4 H16	2001390	"HS/2001390/67,Heat sink"	Heat sink
IC101-106	118730	"NJM072M/DMP08P,NJM072M"	NJM072M
IC201 IC301	131763	"IRS2052MPBF/QFN48P/2,IRS2052MPBF"	IRS2052MPBF
IC202	118724	"7805/KIA/D-PAK,7805"	7805
IC203	129536	"79L05F/KIA/SOT89,KIA79L05F"	KIA79L05F
IC204 IC304	133640	"LM26CIM5-PHA/SOT23-5,LM26CIM5-PHA"	LM26CIM5-PHA
IC205 IC305	128200	"LM26CIM5-TPA/SOT23-5,LM26CIM5-TPA"	LM26CIM5-TPA
IC302	118926	"74HC00/SOP14P,74HC00"	74HC00
L201-202 L301-302	2001369	"24UH/37/2001369,24uH"	24uH
LD101 LD204	119236	"LD/G/1608S/LTST-C190TGKT,LTST-C190TGKT"	LTST-C190TGKT
LD201 LD301	130293	"LD/Y/1608/BL-HKB36A,BL-HKB36A"	BL-HKB36A
LD202 LD302	129968	"LD/R/1608/BL-HUE36A,BL-HUE36A"	BL-HUE36A
Q101-102 Q106-107			
Q208 Q210 Q212 Q218			
Q308 Q310	118672	"NPN/2N3904/SOT23,2N3904"	2N3904
Q103 Q108 Q901			
Q904-905 Q908	129509	"N/PMBFJ112/SOT23,PMBFJ112"	PMBFJ112
"Q104-105 Q109-110			
Q215 Q217			
Q230 Q315 Q317 Q330			
Q902 Q906"	118638	"NPN/KRC403/USM,KRC403"	KRC403
Q201	118643	"NPN/KTC4375-Y/SOT89,KTC4375-Y"	KTC4375-Y
Q204-207 Q304-307	130597	"N/IRFB5620PBF/TO220,IRFB5620PBF"	IRFB5620PBF
Q211	118627	"PNP/KRA303/USM,KRA303"	KRA303
Q213	118657	"PNP/KTA1666/SOT89,KTA1666"	KTA1666
Q214 Q216 Q219			
Q314 Q316 Q319	118663	"PNP/2N3906S/SOT23,2N3906S"	2N3906S
R101-102 R128-129	119455	"R1.8KJ/2012,1.8K"	1.8K
"R105-106 R114-117			
R132-133 R141-144			
R225-226 R284			
R295 R297 R325-326			
R351-353			
R397 R905-906			
R912-913"	119367	"R10KJ/2012,10K"	10K
R107 R125 R134 R151			
R246 R346 R901 R908	119605	"R3.9KJ/2012,3.9K"	3.9K
R108 R110 R135 R137			
R902 R909	119499	"R22KJ/2012,22K"	22K
R109 R111 R136 R138	119473	"R2KJ/2012,2K"	2K

ELECTRICAL PARTS LIST

REF	ITEM NO.	DEFINE	VALUE
R112 R139	119949	"R4.3KJ/2012,4.3K"	4.3K
R113 R140	119580	"R33KJ/2012,33K"	33K
R118 R123 R145 R149			
R155-158 R907 R914	119370	"R100KJ/2012,100K"	100K
"R120 R127 R146			
R153 R209-210 R265			
R286 R288 R293			
R309-310 R386 R388			
R393"	119630	"R47KJ/2012,47K"	47K
R121 R147	119466	"R180KJ/2012,180K"	180K
"R122 R126 R148			
R152 R201-202			
R211-212 R248 R272			
R278 R301-302			
R311-312 R348 R372"	119362	"R1KJ/2012,1K"	1K
R154 R223-224			
R323-324	119590	"R3.6KJ/2012,3.6K"	3.6K
R159-160	119401	"R12KJ/2012,12K"	12K
R170-171 R279-280			
R381	104234	"R10J/A,10"	10
R203-204 R294			
R303-304	119548	"R3KJ/2012,3K"	3K
R213-214 R313-314	119420	"R150J/2012,150"	150
R215-216 R241			
R256 R315-316			
R341 R356	119353	"R100J/2012,100"	100
R219-220 R319-320	104274	"R2KJ/A,2K"	2K
R221-222 R271			
R321-322 R371	119707	"R6.8KJ/2012,6.8K"	6.8K
R227-228 R327-328	104347	"R56KJ/A,56K"	56K
R229-232 R282-283			
R329-332 R382-383	119645	"R4.7J/2012,4.7"	4.7
R233-236 R333-336	119346	"R10J/2012,10"	10
R237-238 R337-338	104454	"R10J/1W/MF/T,10 1W"	10 1W
R240 R243 R250 R340			
R343 R350	119670	"R560J/2012,560"	560
R242 R266 R342	119576	"R3.3KJ/2012,3.3K"	3.3K
R247 R347	119689	"R6.2KJ/2012,6.2K"	6.2K
R264 R285 R287			
R292 R385 R387 R392	119625	"R4.7KJ/2012,4.7K"	4.7K
R267-268	104673	"R56J/2W/MO/T,56 2W"	56 2W
R269-270 R369-370	119405	"R120KJ/2012,120K"	120K
R274-275 R374-375	104745	"R25J/5W/CE,25"	25
R276-277 R376-377	129577	"R4.7KJ/2W/MF/T,4.7K 2W"	4.7K 2W
R290 R390	119617	"R47J/2012,47"	47
R296	119502	"R220KJ/2012,220K"	220K
R3 R103-104 R124			
R130-131 R150			
R244-245 R344-345	119747	"R8.2KJ/2012,8.2K"	8.2K
R903 R910	119435	"R150KJ/2012,150K"	150K
R904 R911	119635	"R470KJ/2012,470K"	470K
SW201	112022	"SL/JSS-2208A,JSS-2208A"	JSS-2208A
"TP106 TP111			
TP205-207 TP209			
TP305-307 TP310			
TP312"	106871	"TP/TP00325-21/T,TP00325-21"	TP00325-211

ELECTRICAL PARTS LIST

REF	ITEM NO.	DEFINE	VALUE
DPA-600D FRONT			
AN1002 CN1001	133349	"05P/ASSY/2.5/133349,ASS'Y-05P"	ASS'Y-05P
AN101	111371	"16P/LW-5267/2.5,LW5267-16P"	LW5267-16P
AN901	111365	"10P/LW-5267/2.5,LW5267-10P"	LW5267-10P
BK1-2	113528	"BK/113528,Bracket"	Bracket
C1-2	120348	"CE4.7U16M/3216,4.7/16"	4.7/16
C13-14 C903-904 C908	120352	"CE100P50J/2012,100P"	100P
C17-20 C25-26			
C909-910 C1001	120421	"CE0.1U50K/2012,0.1U"	0.1U
C5-6 C906	133535	"MA0.18U63J/CEM/T,0.18/63(M)"	0.18/63(M)
C901-902	120381	"CE330P50J/2012,330P"	330P
C905	127554	"EC2.2U50M/NXB/T,2.2/50"	2.2/50
C9-10 C907	120391	"CE470P50J/2012,470P"	470P
C911	126494	"CE0.01U250K/2012,0.01U"	0.01U
CN1002	111360	"05P/LW-5267/2.5,LW5267-05P"	LW5267-05P
CON901	130135	"TER/OQ0812510000G/08H/130135,TERMINAL08P"	TERMINAL08P
D1-2 D901-906			
D1001-1003	119196	"D/BAV99/SOT23,BAV99"	BAV99
D5-8	119190	"D/BAS21/SOT23,BAS21"	BAS21
IC1-2 IC901	118730	"NJM072M/DMP08P,NJM072M"	NJM072M
IC902	103384	"PC/LTV847,LTV847"	LTV847
LD1 LD5	129892	"LD/R/3T/BL-B4541,BL-B4541"	BL-B4541
LD1004	126148	"LD/B/3T/SLB1381N-UZ,SLB1381N-UZ"	SLB1381N-UZ
LD2 LD6 LD1002	130016	"LD/Y/3T/BL-3141-AA-AV,BL-3141-AA-AV"	BL-3141-AA-AV
LD3-4 LD7-8 LD1001			
LD1003	130018	"LD/G/3.1T/BL-B2141,BL-B2141-AA-AV-T05"	BL-B2141-AA-AV-T05
LD901-904	130293	"LD/Y/1608/BL-HKB36A,BL-HKB36A"	BL-HKB36A
LIM101-103	114982	"LIMITER/5.5/11.5/114982,11.5mm"	11.5mm
LIM107	114985	"LIMITER/5.5/8/114985,8mm"	8mm
LIM1-8	114983	"LIMITER/5.5/14.7/114983,14.7mm"	14.7mm
Q1-4 Q13-18 Q25-26			
Q901-904 Q1001-1002	118663	"PNP/2N3906S/SOT23,2N3906S"	2N3906S
Q9-10	118672	"NPN/2N3904/SOT23,2N3904"	2N3904
R1003 R1006	119495	"R2.2KF/3216,2.2K 1%"	2.2K 1%
R1004	119620	"R470J/2012,470"	470
R1-2 R25-26 R908	119580	"R33KJ/2012,33K"	33K
R13-14	119366	"R10KJ/1608,10K"	10K
R17-18	119711	"R68KJ/2012,68K"	68K
R21-22 R907	119362	"R1KJ/2012,1K"	1K
R29-30 R909	119605	"R3.9KJ/2012,3.9K"	3.9K
R37-38 R1001	119393	"R120J/2012,120"	120
R45-46 R920 R922			
R924 R926	119630	"R47KJ/2012,47K"	47K
R49-50 R905-906	119367	"R10KJ/2012,10K"	10K
R5-6 R41-42 R1002	119499	"R22KJ/2012,22K"	22K
R901-902	119455	"R1.8KJ/2012,1.8K"	1.8K
R903-904	119747	"R8.2KJ/2012,8.2K"	8.2K
R9-10 R33-34 R910	119401	"R12KJ/2012,12K"	12K
R911-914	119527	"R2.7KJ/2012,2.7K"	2.7K
R915-918	119548	"R3KJ/2012,3K"	3K
R919 R921 R923 R925	119625	"R4.7KJ/2012,4.7K"	4.7K
SW1	112178	"PW/SDDL1PASL051,SDDL1PASL051"	SDDL1PASL051
VR1-2	105055	"203A/09/RK09K11N0005,20KA"	20KA
VR901	104992	"203A/09/RK09S1110011,20KA"	20KA
DPA-600D SMPS			
BD2-3 BD6	127462	"120OHM/BEAD/127462,120ohm"	120ohm

ELECTRICAL PARTS LIST

REF	ITEM NO.	DEFINE	VALUE
BD8	125866	"BD/TS15P05G,TS15P05G"	TS15P05G
BK2	132986	"HS/132986/55,Heat sink"	Heat sink
BK4	132373	"BK/132373,Bracket"	Bracket
BK7	132989	"HS/132989/55,Heat sink"	Heat sink
BK9-10	132374	"BK/132374,Bracket"	Bracket
C100 C102	120352	"CE100P50J/2012,100P"	100P
C104-105	125720	"CE2200P400M/SD,2200P"	2200P
C108	120283	"CE0.22U50Z/2012,0.22U"	0.22U
C109	120275	"CE2200P50K/2012,2200P"	2200P
C115	120247	"CE0.1U50Z/2012,0.1U"	0.1U
C117	105825	"MA0.1U200J/T,0.1/200(M)"	0.1/200(M)
C118	120235	"CE0.001U50J/2012,0.001U"	0.001U
C119	132817	"EC220U450M/TDC,220/450"	220/450
C1-2	132860	"MA0.022U630J/MP,0.022/630(M)"	0.022/630(M)
C121	105548	"EC4.7U50M/RG/T,4.7/50"	4.7/50
C123-124 C139-140	132883	"MA2.2U250J/MP,2.2/250(M)"	2.2/250(M)
C125-132	129521	"CE2200P1KM/E/T,2200P1K"	2200P1K
C15	120363	"CE180P50J/2012,180P"	180P
"C17 C39 C57 C63 C65 C67 C69 C72 C75-76 C82-83 C88 C94 C97 C101 C106 C110 C122 C137 C204 C207 C220"	120421	"CE0.1U50K/2012,0.1U"	0.1U
C201	132816	"EC10U450M/NFC,10/450"	10/450
C203 C206	105508	"EC47U25M/RG/T,47/25"	47/25
C205	120348	"CE4.7U16M/3216,4.7/16"	4.7/16
C27 C451	120315	"CE0.47U50Z/2012,0.47U"	0.47U
C34-35	132799	"EC470U250M/TDC,470/250"	470/250
C4 C7 C11 C14 C55 C70 C73 C81	105462	"EC22U25M/RG/T,22/25"	22/25
C455-456	105909	"MA0.1U250J/DEM/T,0.1/250(M)"	0.1/250(M)
C457	126495	"CE0.001U250J/2012,0.001U"	0.001U
C46 C202	105793	"CE2200P250M/AC,2200P250"	2200P250
C461	105933	"MA3900P250J/CEM/T,3900P250(M)"	3900P250(M)
C490	120346	"CE0.33U25Z/2012,0.33/25"	0.33/25
"C5-6 C31-32 C49 C86-87 C96 C111 C114 C133"	120251	"CE1U50Z/2012,1U"	1U
C58 C134 C136	125212	"CE0.1U100K/3216,0.1U100"	0.1U100
C61 C84	120417	"CE0.01U50K/2012,0.01U"	0.01U
C62 C66 C68	105351	"EC220U50M/RD,220/50"	220/50
C64	129356	"CE10U6.3K/2012,10U6.3"	10U6.3
C71 C103 C113 C116	105625	"EC2200U35M/RD,2200/35"	2200/35
C74	105463	"EC22U50M/SHL/T,22/50"	22/50
C77	125719	"CE0.001U1KK/Y5P/T,0.001/1K"	0.001/1K
C78	132818	"MA0.47U630J/MP,0.47/630(M)"	0.47/630(M)
C79	125212	"CE0.1U100M/3216,0.1U"	0.1U
C8 C48	125849	"EC220U100M/NXA,220/100"	220/100
C85 C112	127711	"EC10U50M/NXB/T,10/50"	10/50
C95 C120	125848	"EC100U50M/NXB/T,100/50"	100/50
C98 C402	130523	"CE220P1KK/Y5R,220P1K"	220P1K
CN1-2	111360	"05P/LW-5267/2.5,LW5267-05P"	LW5267-05P
CN4	110850	"TER/BL/010/02H/110850,TERMINAL02P"	TERMINAL02P
CN5	110495	"05P/B5P-VH/3.96/110495,B05PVH-05P"	B05PVH-05P
CX1 CX3	105992	"MA1U275K/AC,1/275(M)"	1/275(M)
D1 D10 D46-47	119171	"D/1N4148/SOT23,1N4148"	1N4148

ELECTRICAL PARTS LIST

REF	ITEM NO.	DEFINE	VALUE
D12 D35 D37-38			
D57-59	125880	"SD/SS16/SMA,SS16"	SS16
"D2 D7 D11 D22-23			
D25-27			
D30 D34 D36 D39-42			
D44-45 D48-50			
D55-56 D205"	132384	"SD/US1M/SMA,US1M"	US1M
D204	119210	"ZD/10V/BZX84C/SOT23,10V"	10V
D21 D43	119194	"D/KDS184/SOT23,KDS184"	KDS184
D29	132812	"SD/RFX10TF6S,RFX10TF6S"	RFX10TF6S
D33	131633	"D/UF5408,UF5408"	UF5408
D6 D9 D18 D51-54	125194	"D/SF20LC30,SF20LC30"	SF20LC30
F1	112598	"20/5A/250V/T/KUCJ/112598,T5A/250V"	T5A/250V
F2	133284	"ATO/30A/32V/F/UL/133284,30A/32V"	30A/32V
F3	111579	"FUSE/GF-205B,GF-205B"	GF-205B
F4	128336	"FUSE/178.6165,178.6165"	178.6165
H2	133697	"HS/133215/55,Heat sink"	Heat sink
H32	132987	"HS/132987/55,Heat sink"	Heat sink
JK1	111737	"ACIN/SS-7B-1-09,AC IN"	AC IN
L1-2	127463	"100OHM/BEAD/127463,100ohm"	100ohm
L4-5	133335	"6MH/25/CHOKE/LF19-F06M,6mH"	6mH
L9-10	132367	"PT/132367,132367"	132367
PC1-6 PC9 PC16	118872	"PC/LTV817B,LTV817B"	LTV817B
Q1 Q15 Q22 Q26	132830	"NPN/BCP68/SOT223,BCP68"	BCP68
Q11 Q14 Q401	132801	"N/IPP60R125C6/TO220,IPP60R125C6"	IPP60R125C6
Q12 Q16 Q21 Q25	132831	"PNP/BCP69/SOT223,BCP69"	BCP69
Q13	118627	"PNP/KRA303/USM,KRA303"	KRA303
Q17-18 Q23-24	132863	"N/IRFB4332PBF/TO220,IRFB4332PBF"	IRFB4332PBF
Q20	118657	"PNP/KTA1666/SOT89,KTA1666"	KTA1666
Q4 Q8 Q19	124670	"NPN/MMBT2222/SOT23,MMBT2222"	MMBT2222
Q7	129519	"PNP/KTN2907AS/SOT23,KTN2907AS"	KTN2907AS
R10 R110	119576	"R3.3KJ/2012,3.3K"	3.3K
R100 R111	104543	"R0.1J/3W/MO,0.1 3W"	0.1 3W
R103	119822	"R68KF/3216,68K 1%"	68K 1%
R104	119732	"R7.5KJ/2012,7.5K"	7.5K
R105	119689	"R6.2KJ/2012,6.2K"	6.2K
R11	127195	"R560F/2012,560 1%"	560 1%
R113	119405	"R120KJ/2012,120K"	120K
R114	119492	"R220J/2012,220"	220
R117	119644	"R4.7J/3216,4.7"	4.7
R118 R176 R183			
R402 R404	119955	"R51J/2012,51"	51
R119	133259	"R5.49KF/2012,5.49K 1%"	5.49K 1%
R124 R126-127			
R132-133 R159	119473	"R2KJ/2012,2K"	2K
R125	119658	"R51KJ/2012,51K"	51K
R128 R140	119436	"R150KJ/3216,150K"	150K
R13 R18	132822	"R3.9MJ/3216,3.9M"	3.9M
R142	125872	"R200KJ/3216,200K"	200K
R143	132845	"R680KJ/3216,680K"	680K
R146	132932	"R430KJ/3216,430K"	430K
R147 R150	119341	"R1J/3216,1"	1
R15 R79	119401	"R12KJ/2012,12K"	12K
R152	119727	"R750J/2012,750"	750
R155	119425	"R1.5KJ/3216,1.5K"	1.5K
R158	119548	"R3KJ/2012,3K"	3K
R160-161 R164-167	104592	"R220J/2W/MO/T,220 2W"	220 2W

ELECTRICAL PARTS LIST

REF	ITEM NO.	DEFINE	VALUE
R16-17	132392	"R1.8MJ/3216,1.8M"	1.8M
R168	132482	"R120KJ/3216,120K"	120K
R169 R459	132483	"R27KJ/3216,27K"	27K
R174	119770	"R100KF/3216,100K 1%"	100K 1%
R19-20 R203-204	119631	"R47KJ/3216,47K"	47K
"R2 R66-67 R73 R89			
R108 R129 R134 R136			
R154 R177 R181 R403			
R405 R461"	119367	"R10KJ/2012,10K"	10K
R201-202	119374	"R1MJ/3216,1M"	1M
R205	119487	"R22J/2012,22"	22
R206	119670	"R560J/2012,560"	560
R24	126498	"R2.7KF/2012,2.7K 1%"	2.7K 1%
R25	119499	"R22KJ/2012,22K"	22K
R27	119462	"R18KJ/2012,18K"	18K
R3 R5	104518	"R10J/2W/MO/T,10 2W"	10 2W
R33-34	119581	"R33KJ/3216,33K"	33K
R36 R56 R156 R207	119346	"R10J/2012,10"	10
R40 R71 R80 R171			
R178 R180 R409	120063	"R0J/3216,0"	0
R463	119408	"R1.3KF/2012,1.3K 1%"	1.3K 1%
R469	119625	"R4.7KJ/2012,4.7K"	4.7K
R471	104567	"R15KJ/1W/MO/T,15K 1W"	15K 1W
R48 R61	119388	"R12J/2012,12"	12
R54 R144-145	119636	"R470KJ/3216,470K"	470K
R57	104453	"R750KJ/1/2W/MF/A,750K 1/2W"	750K 1/2W
R63 R175	119348	"R10J/3216,10"	10
R64	119701	"R680J/2012,680"	680
R68 R130 R172	119655	"R5.1KJ/2012,5.1K"	5.1K
R69 R138-139			
R148-149	119362	"R1KJ/2012,1K"	1K
R70	119353	"R100J/2012,100"	100
R72	104634	"R330J/2W/MO/T,330 2W"	330 2W
R76 R116 R462	119396	"R1.2KJ/2012,1.2K"	1.2K
R77 R97-98 R115			
R162-163	104537	"R10KJ/2W/MO/T,10K 2W"	10K 2W
R78	119373	"R1MJ/2012,1M"	1M
R7-8 R137	119630	"R47KJ/2012,47K"	47K
R82 R101	119497	"R2.2KJ/2012,2.2K"	2.2K
R87	119823	"R75KF/2012,75K 1%"	75K 1%
R90 R121-123	132849	"R240KJ/3216,240K"	240K
R91	119476	"R20KJ/2012,20K"	20K
R92 R131 R135 R490	119428	"R15KJ/2012,15K"	15K
R93	119586	"R330KJ/2012,330K"	330K
R96 R173 R179 R182	132827	"R6.8J/3216,6.8"	6.8
R99	119408	"R1.3KJ/2012,1.3K"	1.3K
RLY3-4	125868	"24V/881H-1AH-C/S2L1/2,24V"	24V
T1	132820	"T/132820,132820"	132820
T2	132819	"T/132819,132819"	132819
T4	132805	"T/132805,132805"	132805
T6-7	133090	"PT/133090/24V,133090"	133090
TH1	103435	"10/M/10A/160T/-40~180C/DSC-10D-30,10 ohm"	10 ohm
TP1-10 TP16 TP19			
TP201 TP209	106871	"TP/TP00325-21/T,TP00325-21"	TP00325-21
U1	133674	"ICE2PCS02G/SO08P/2,ICE2PCS02G"	ICE2PCS02G
U12	132336	"IR2113/SOIC16P/2,IR2113"	IR2113
U13	132334	"UCC27324D/SOIC08P/2,UCC27324D"	UCC27324D

ELECTRICAL PARTS LIST

REF	ITEM NO.	DEFINE	VALUE
U17	132828	"MIC2778-2BM5/SOT23-5,MIC2778-2BM5"	MIC2778-2BM5
U18	129542	"NJM2403M/DMP08P,NJM2403M"	NJM2403M
U2	133312	"UCC28220D/SOIC16P/2,UCC28220D"	UCC28220D
U3	132173	"TOP242,TOP242"	TOP242
U5	128383	"78R15/KIA/API,78R15"	78R15
U7	132340	"UCC25600/SOIC08P/2,UCC25600"	UCC25600
U8 U10 U15 U401	125843	"KIA431AF/SOT89,KIA431AF"	KIA431AF
U9	103061	"7812/KIA,7812"	7812
VAR1-2	103422	"ZNR/361/INR14D361,360V"	360V
ZD1	122227	"ZD/UZ5.1V/0.2W/USC,5.1V 0.2W"	5.1V 0.2W
ZD2-6 ZD8 ZD11	132803	"ZD/18V/MMBZ5248B/SOT23,18V"	18V
DPA-600D WIRING			
	133175	"FUSE,0215015.MXP"	FUSE
	113303	"FAN BKT ""R"""	
	113302	"FAN BKT ""L"""	
	114182	DC FAN(3110KL-05W-B70-F04	MOTOR/FAN
	109889	"CON ASS'Y,DS,1P,250T08,250T08,80MM"	CONNECTOR ASS'Y
	133388	"CON ASS'Y,FL,5P,5264,5264,AWG26,250mm"	CONNECTOR ASS'Y
	133389	"CON ASS'Y,FL,16P,5264,5264,AWG26,430mm"	CONNECTOR ASS'Y
	133390	"CON ASS'Y,DS,5P,5239,5239,AWG18,150mm"	CONNECTOR ASS'Y
	133391	"CON ASS'Y,FL,10P,5264,5264,AWG26,150mm"	CONNECTOR ASS'Y
	133089	"DC TERMNAL BLOCK,2P,BI-16PTHC-02P"	CONNECTOR WAFER/TERMINAL

TOP & BOTTOM VIEW OF P.C BOARD

DPA-300D AMP

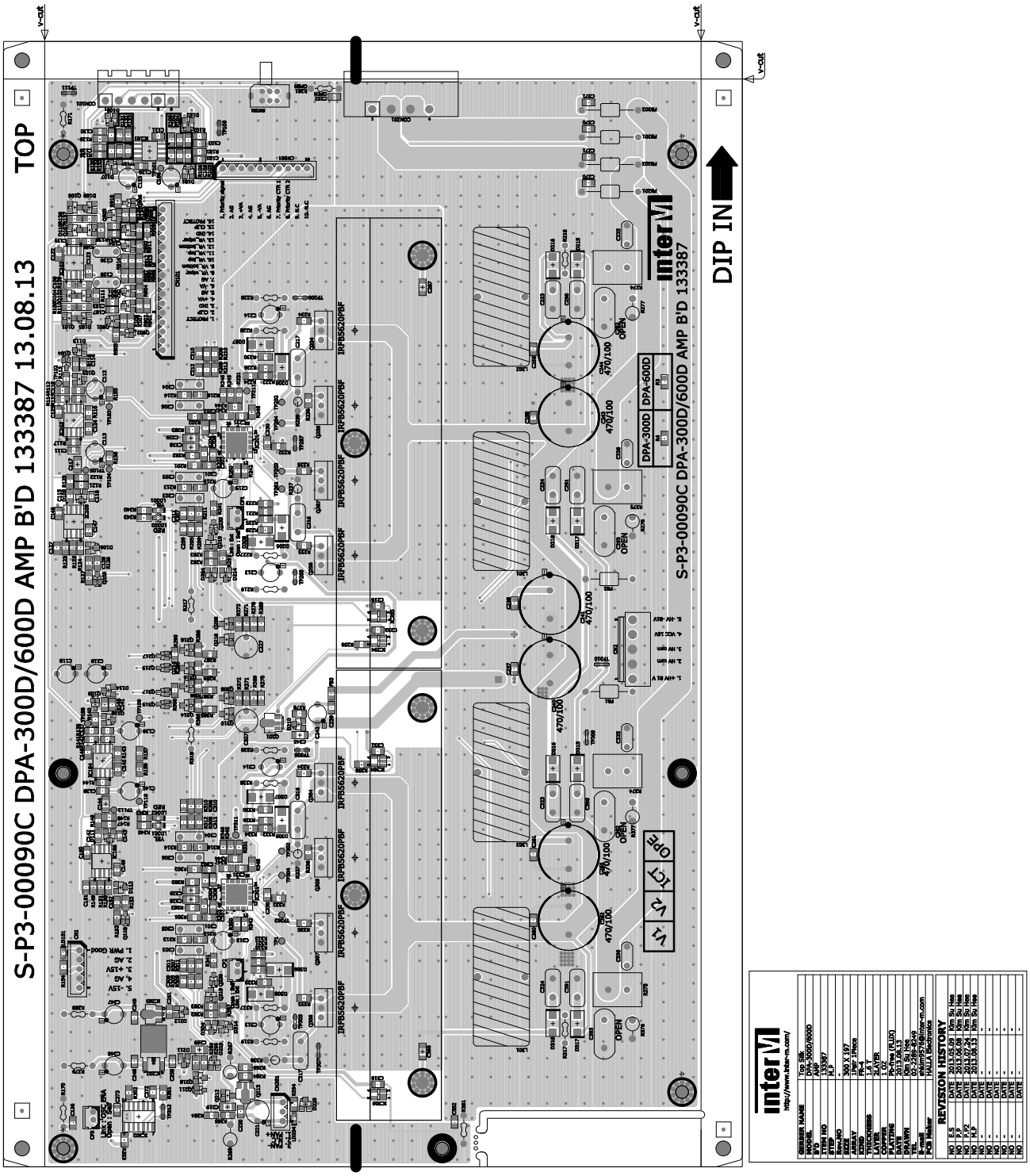

TOP & BOTTOM VIEW OF P.C BOARD

DPA-300D AMP

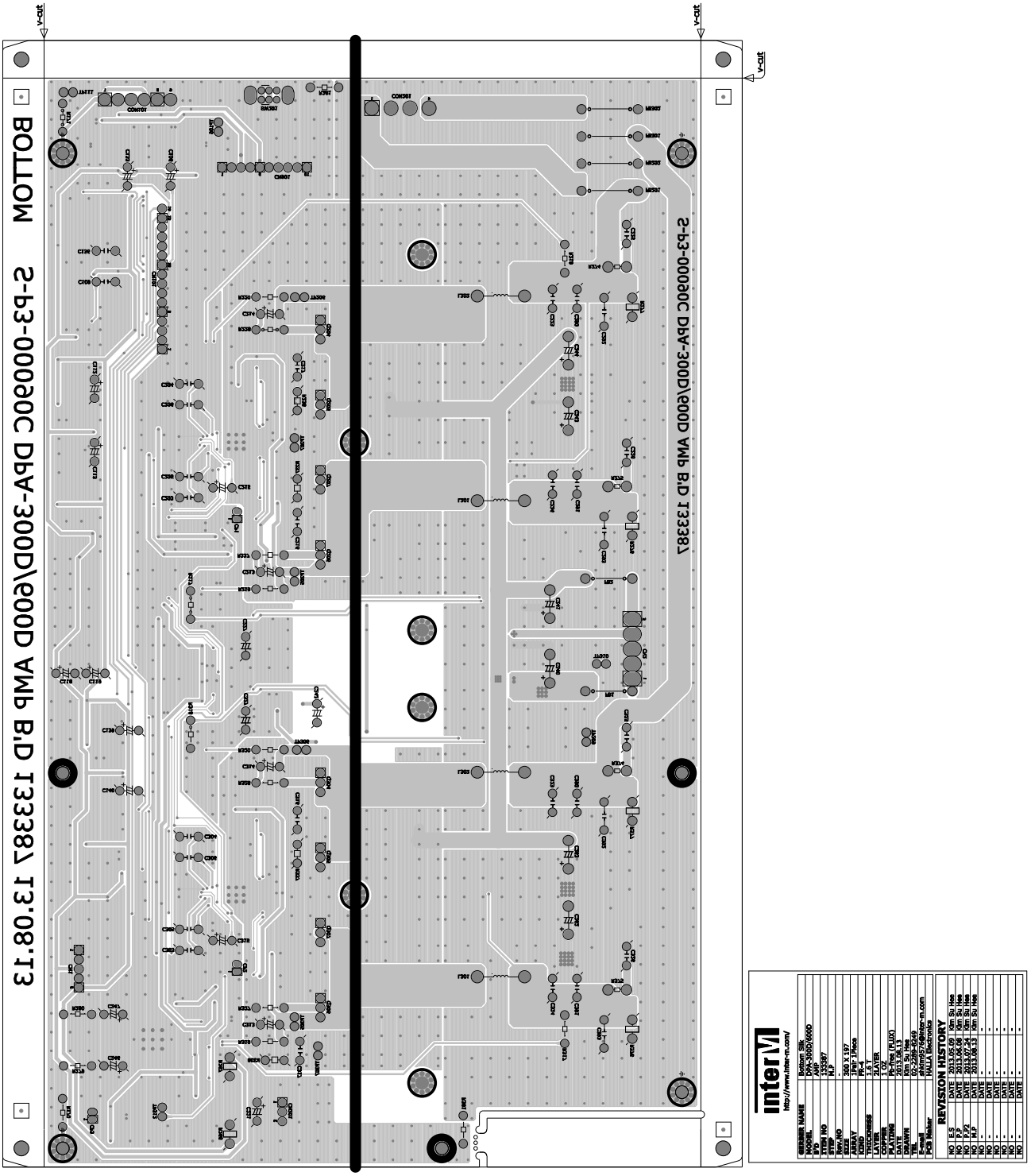

TOP & BOTTOM VIEW OF P.C BOARD

DPA-300D FRONT

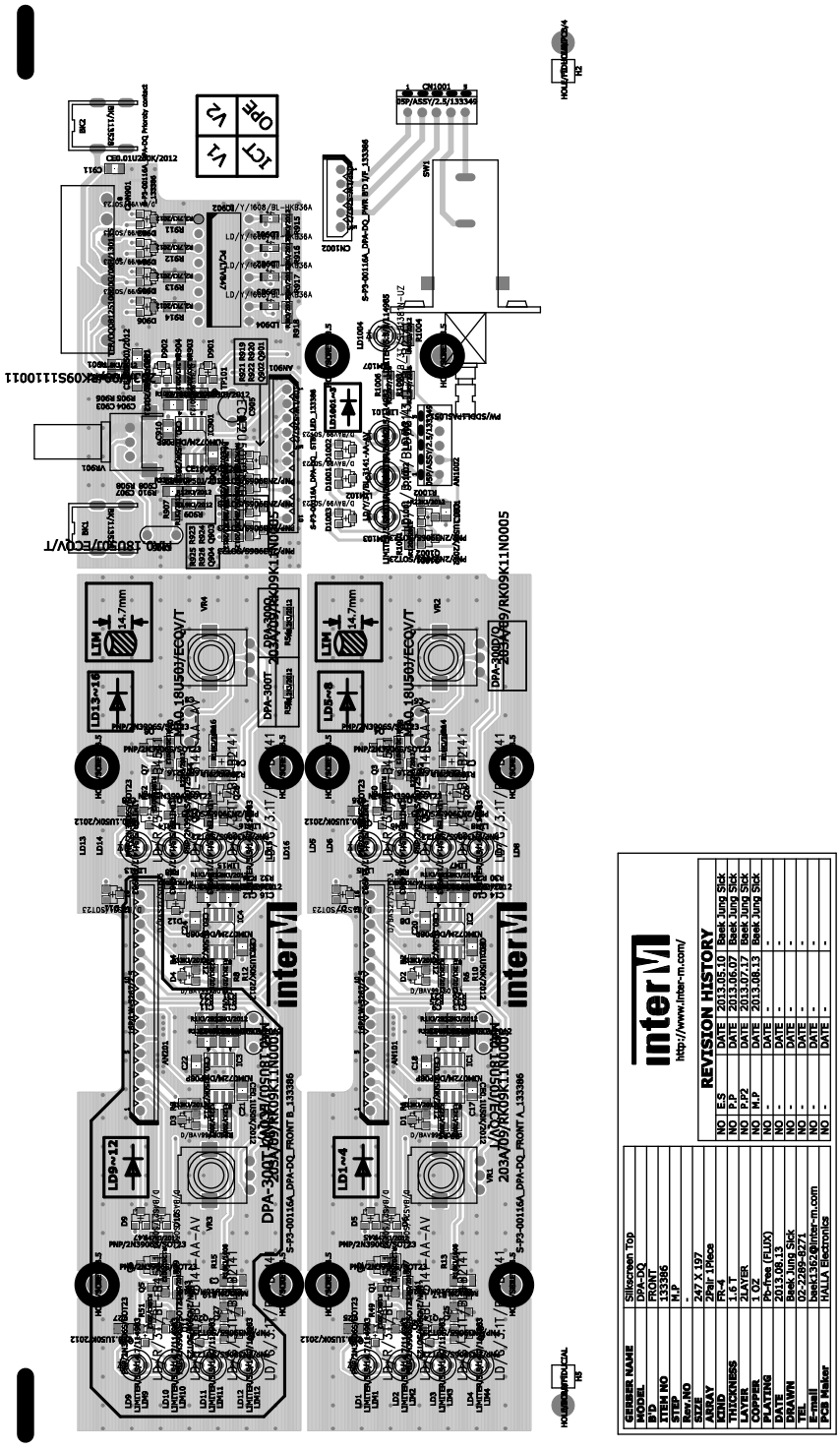

TOP & BOTTOM VIEW OF P.C BOARD

DPA-300D FRONT

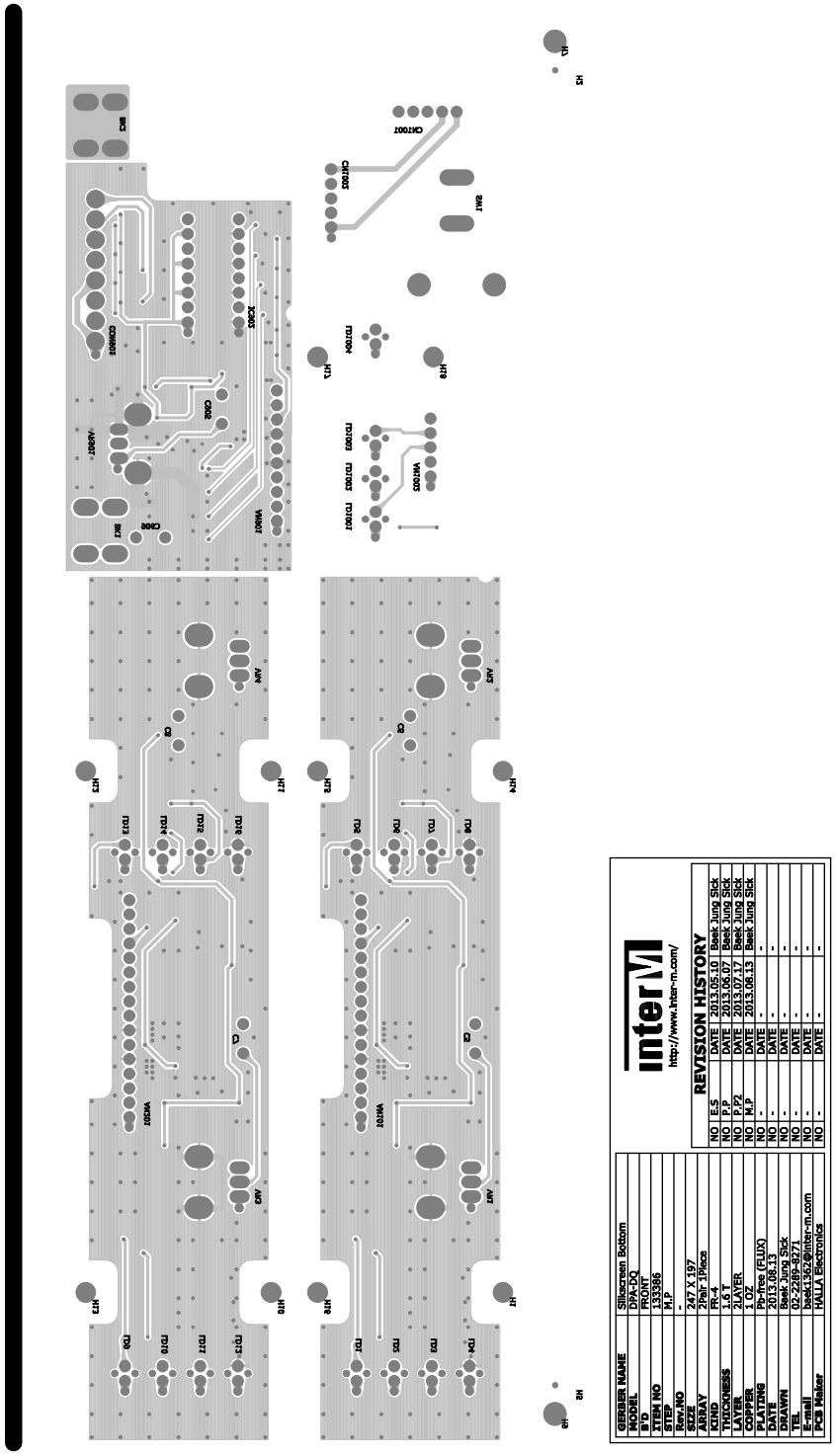

TOP & BOTTOM VIEW OF P.C BOARD

DPA-300D SMPS

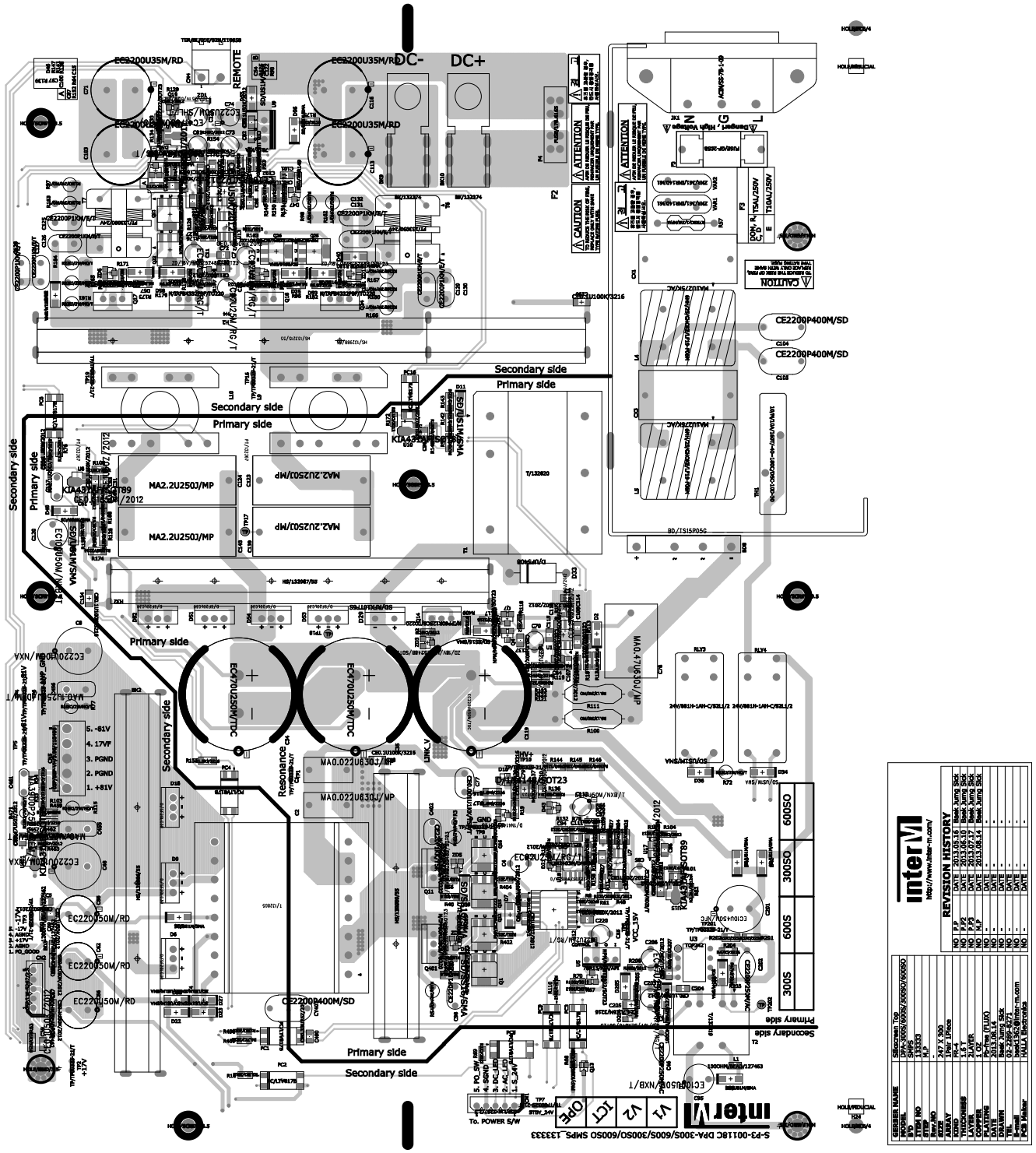

TOP & BOTTOM VIEW OF P.C BOARD

DPA-300D SMPS

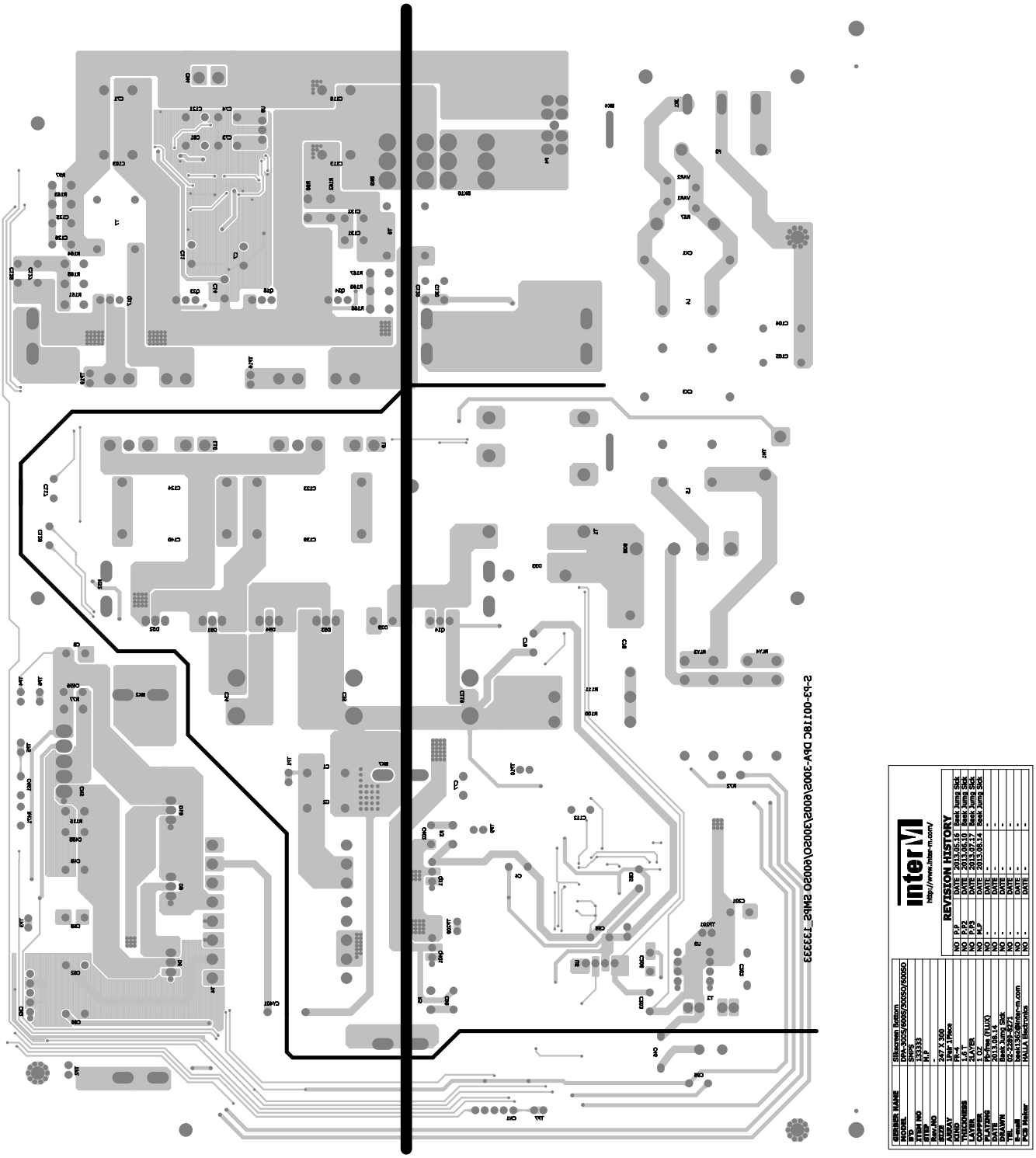

TOP & BOTTOM VIEW OF P.C BOARD

DPA-600D AMP

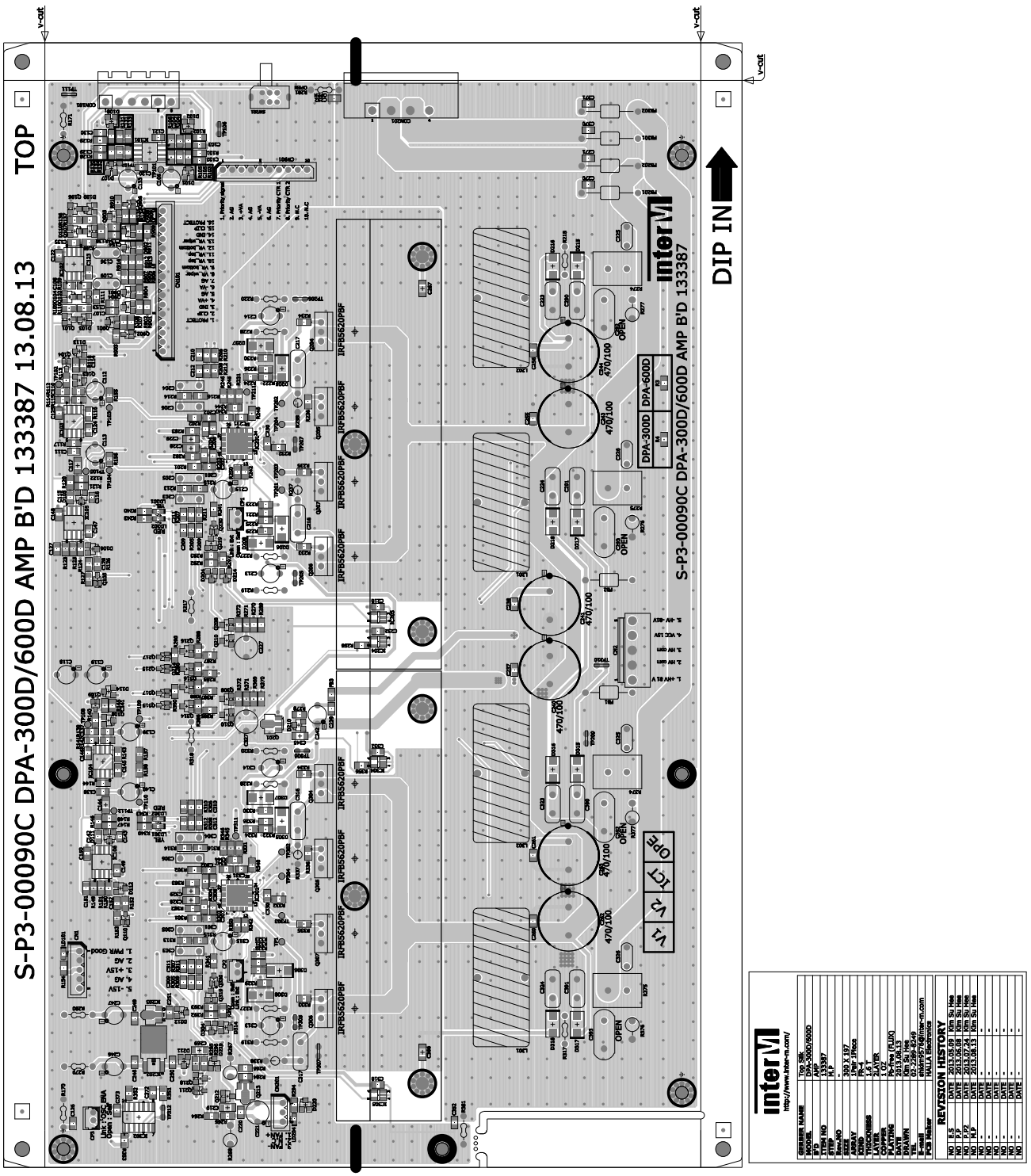

TOP & BOTTOM VIEW OF P.C BOARD

DPA-600D AMP

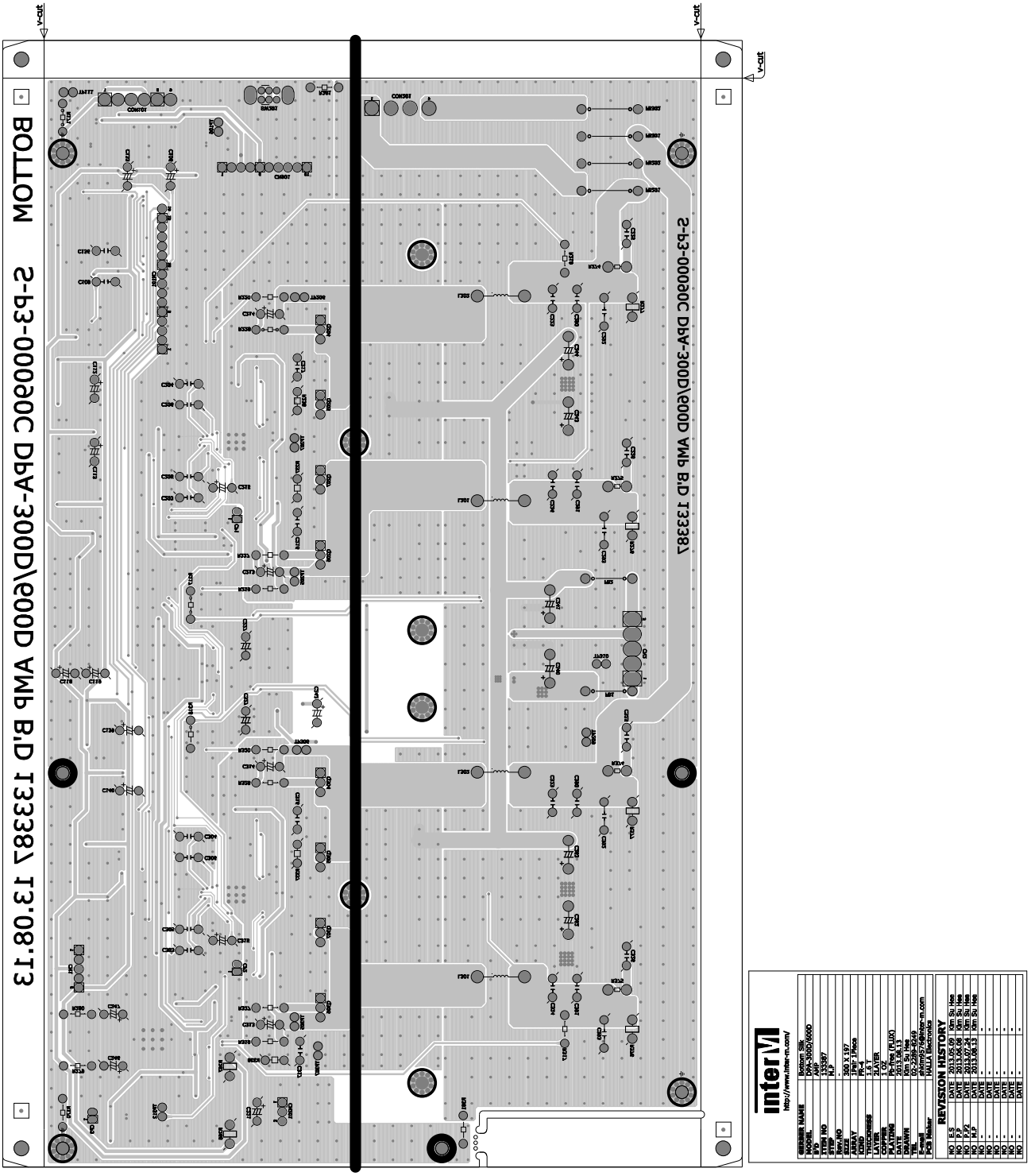

TOP & BOTTOM VIEW OF P.C BOARD

DPA-600D FRONT

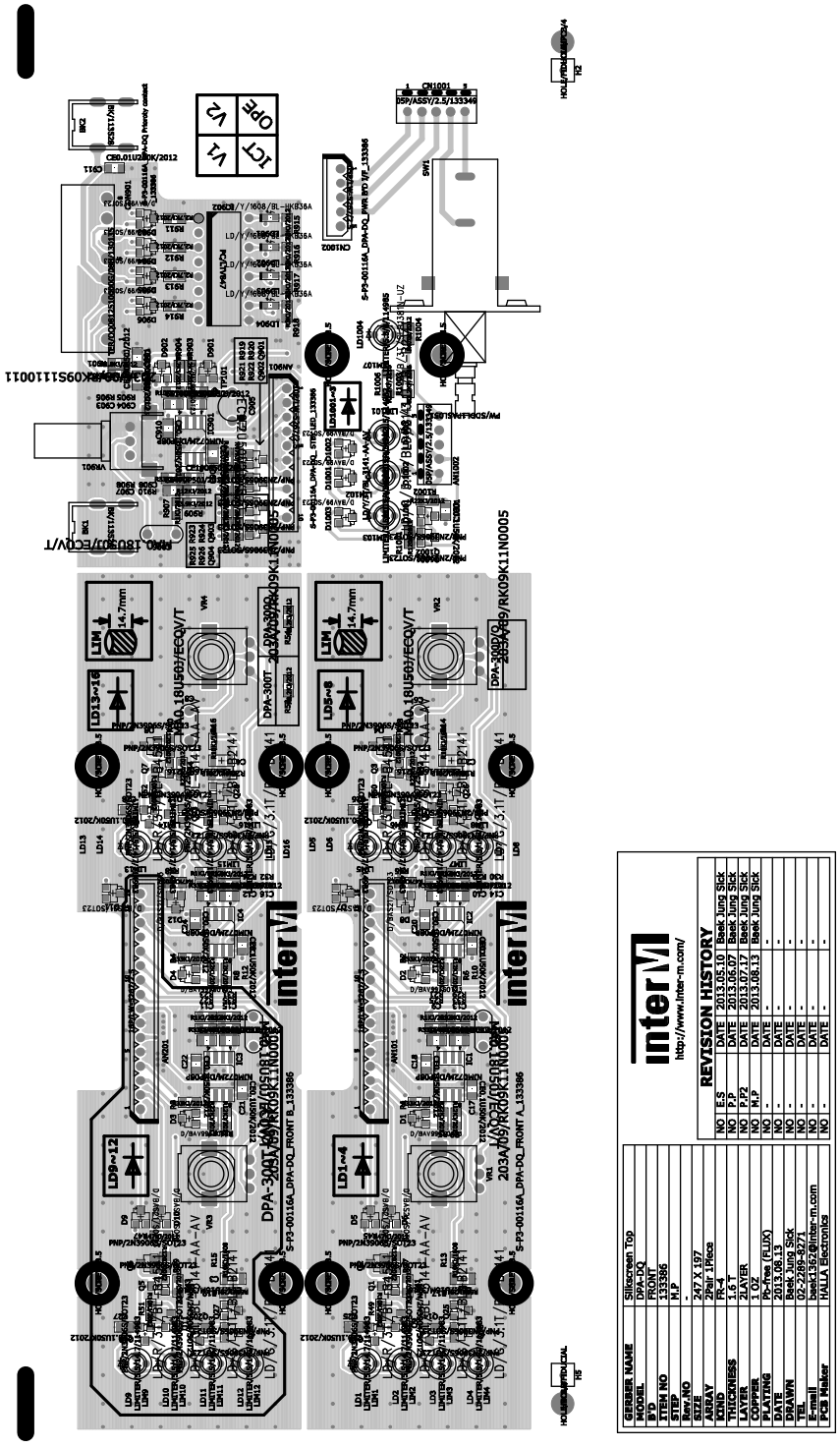

TOP & BOTTOM VIEW OF P.C BOARD

DPA-600D FRONT

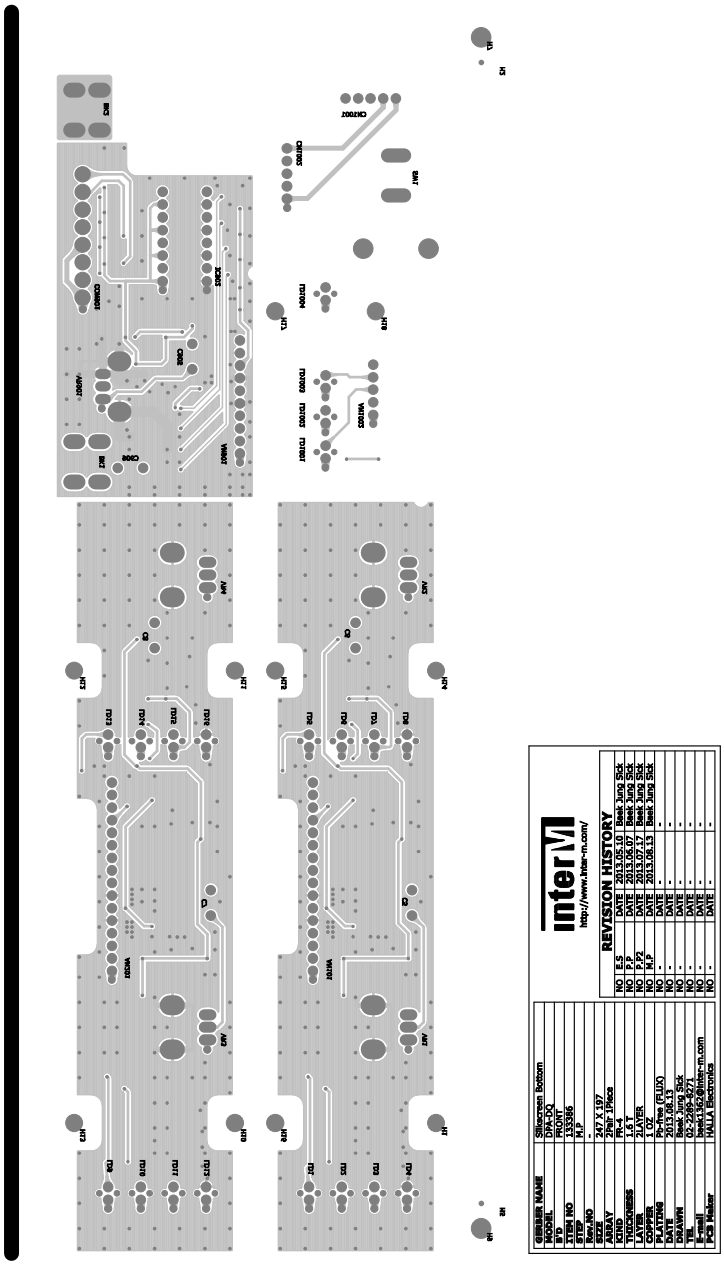

TOP & BOTTOM VIEW OF P.C BOARD

DPA-600D SMPS

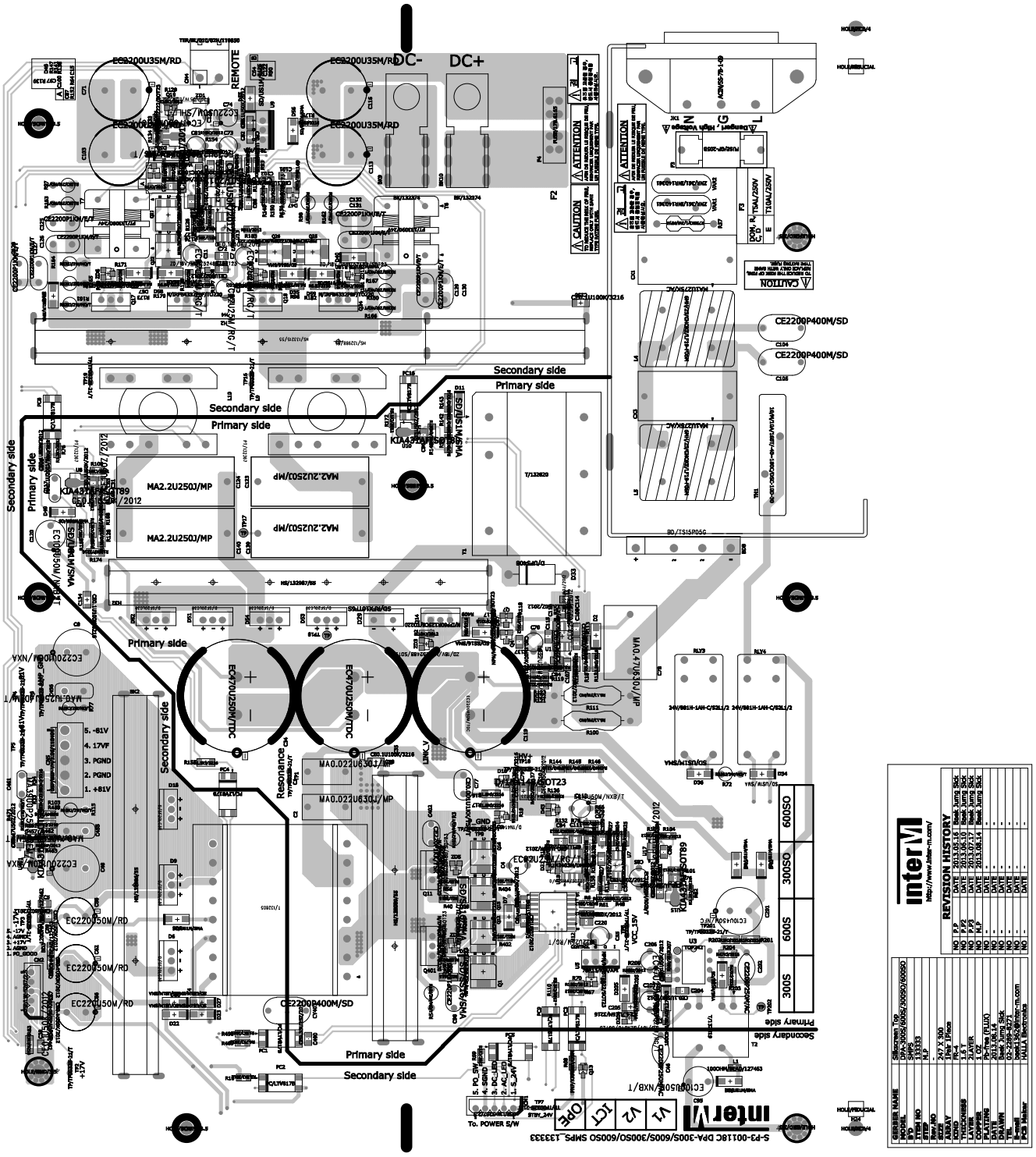

TOP & BOTTOM VIEW OF P.C BOARD

DPA-600D SMPS

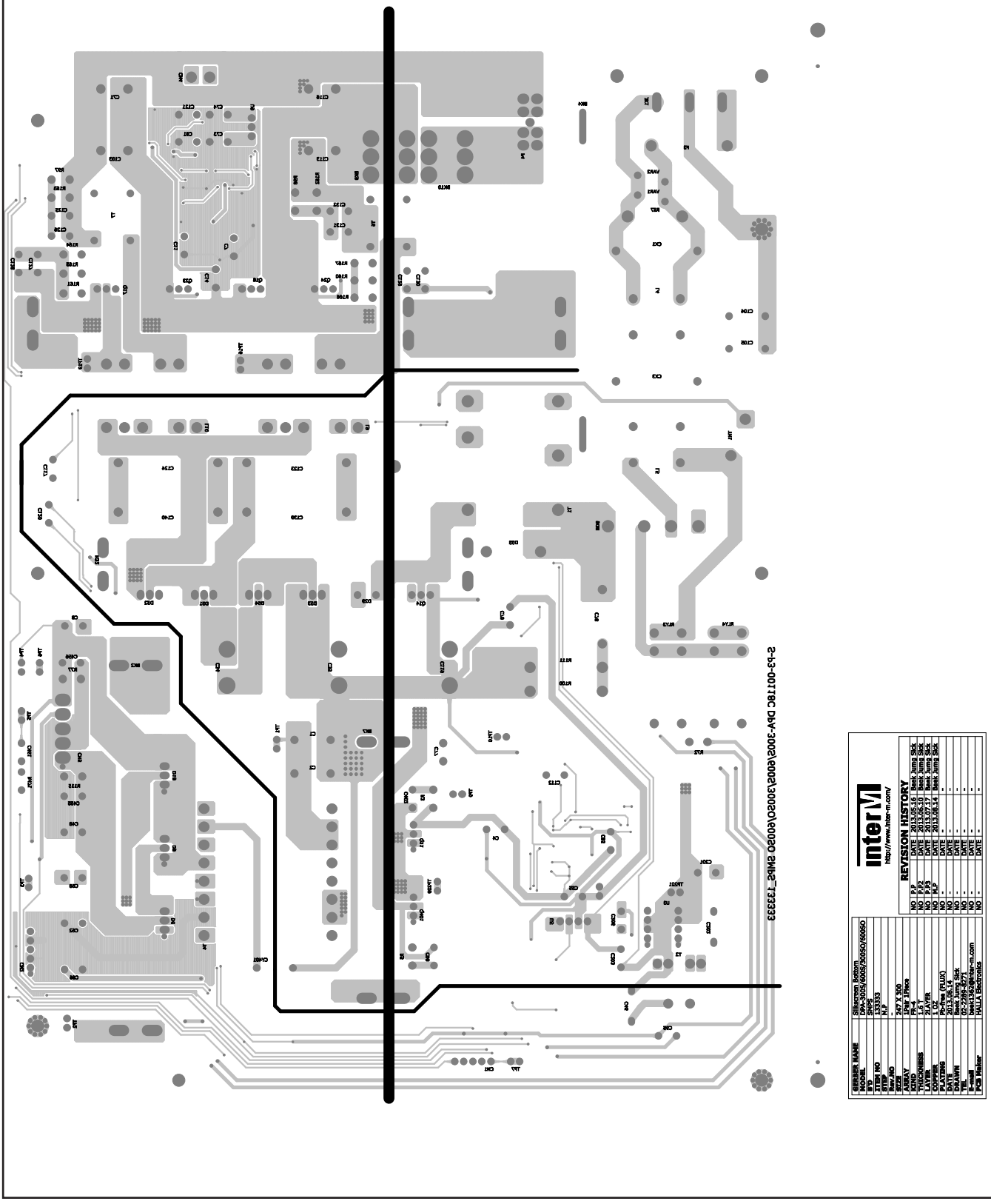

BLOCK DIAGRAM

DPA-300D

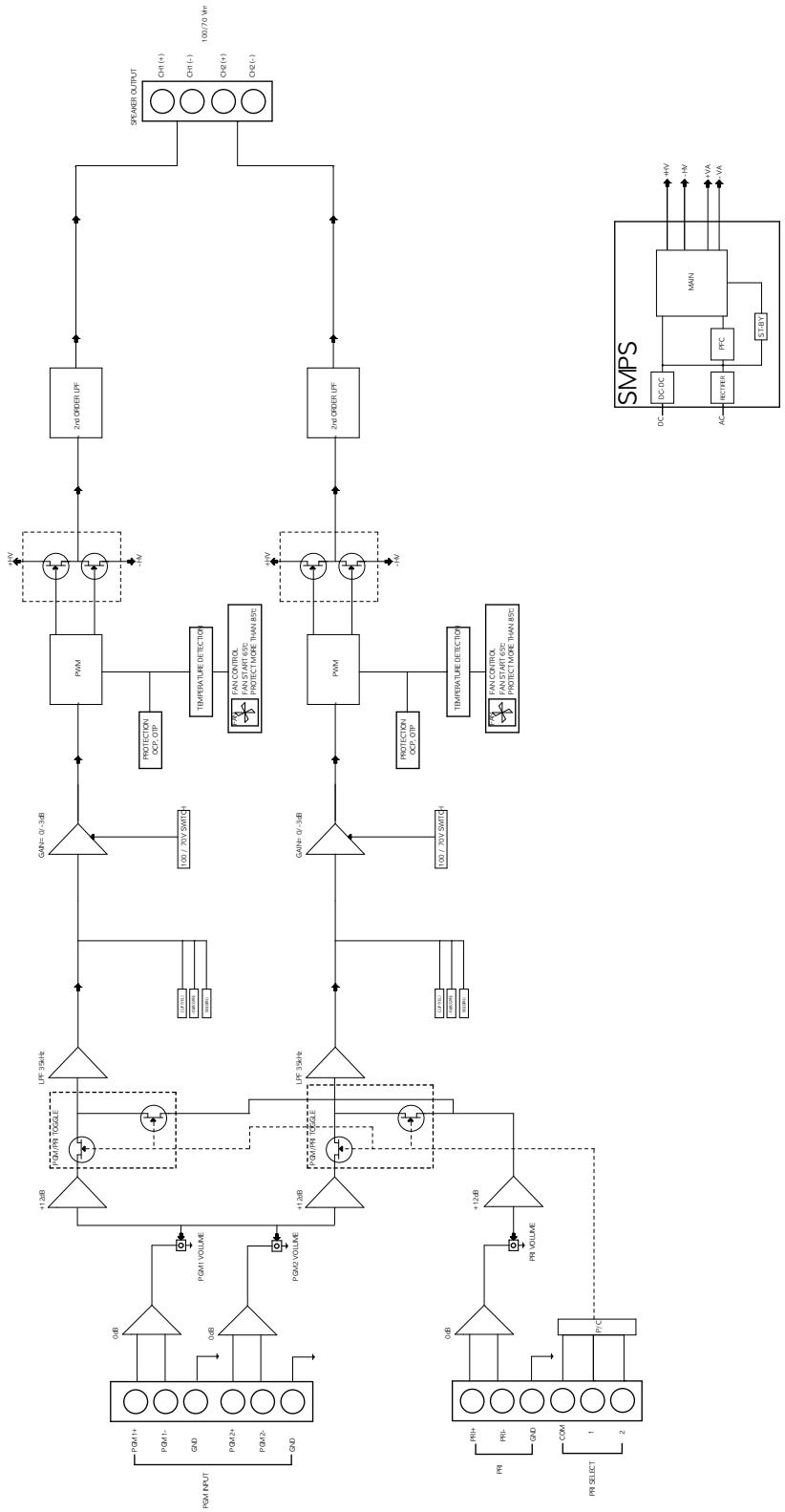

BLOCK DIAGRAM

DPA-600D

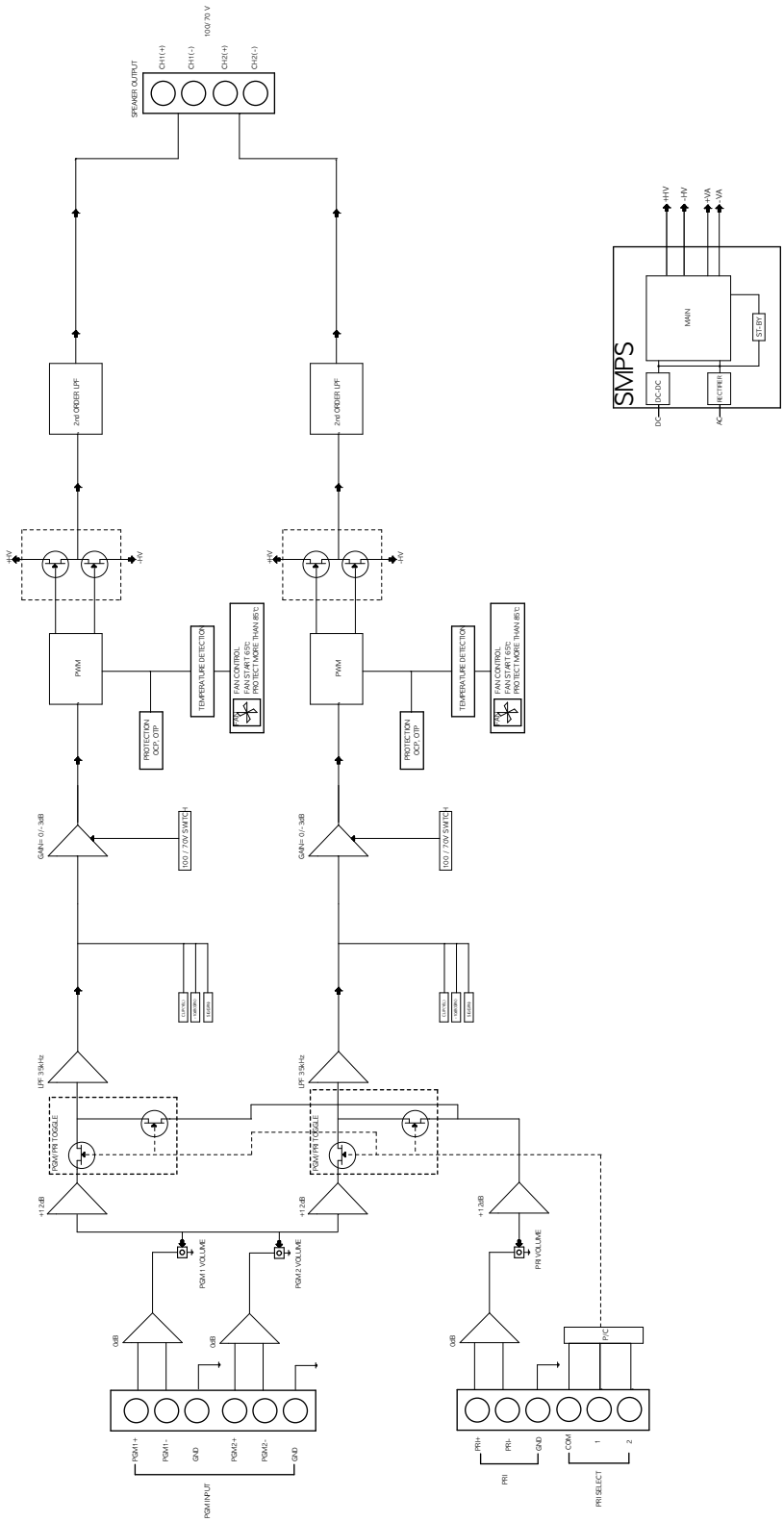

DPA-300D AMP

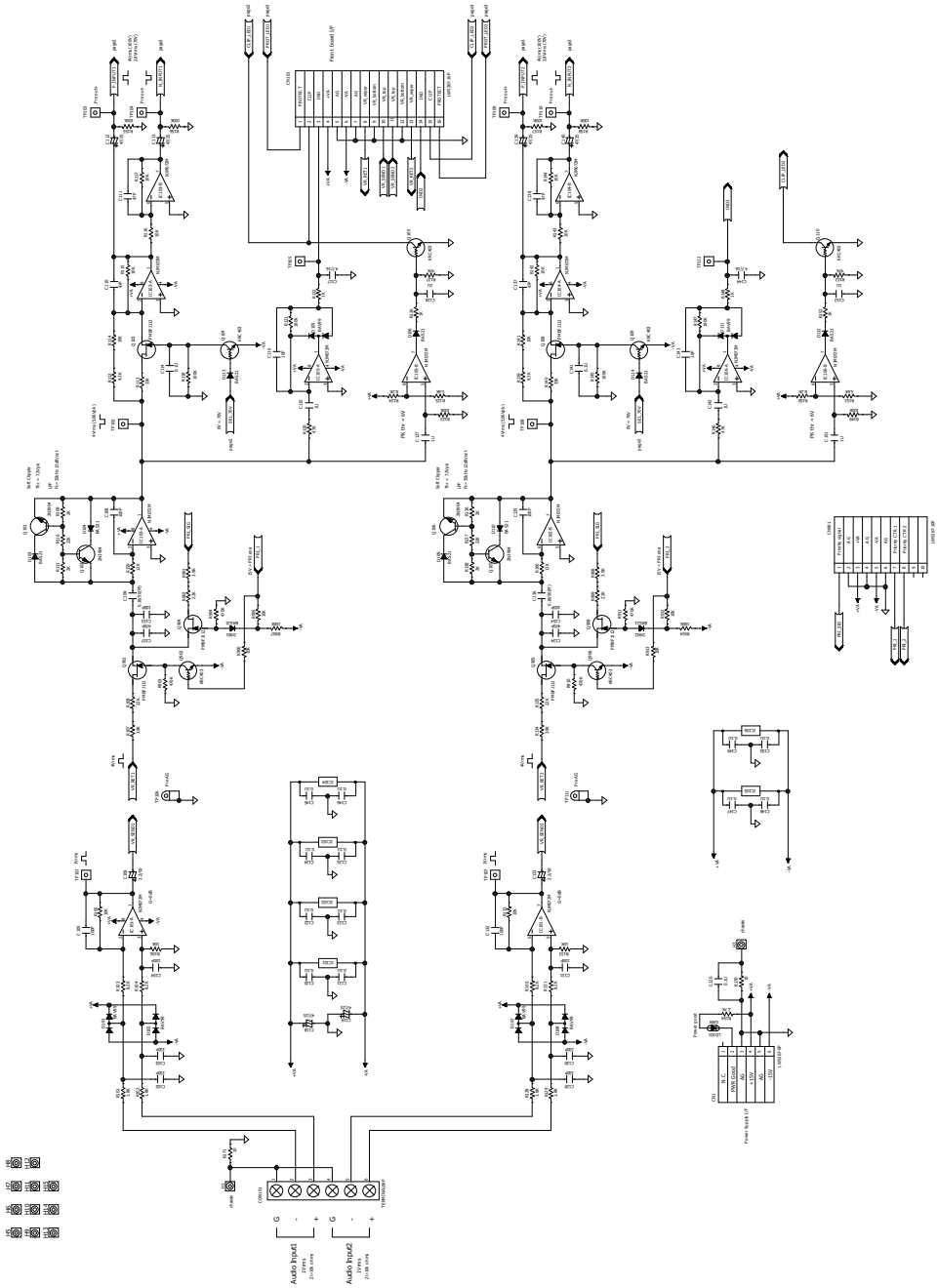

SCHEMATIC DIAGRAM

DPA-300D AMP

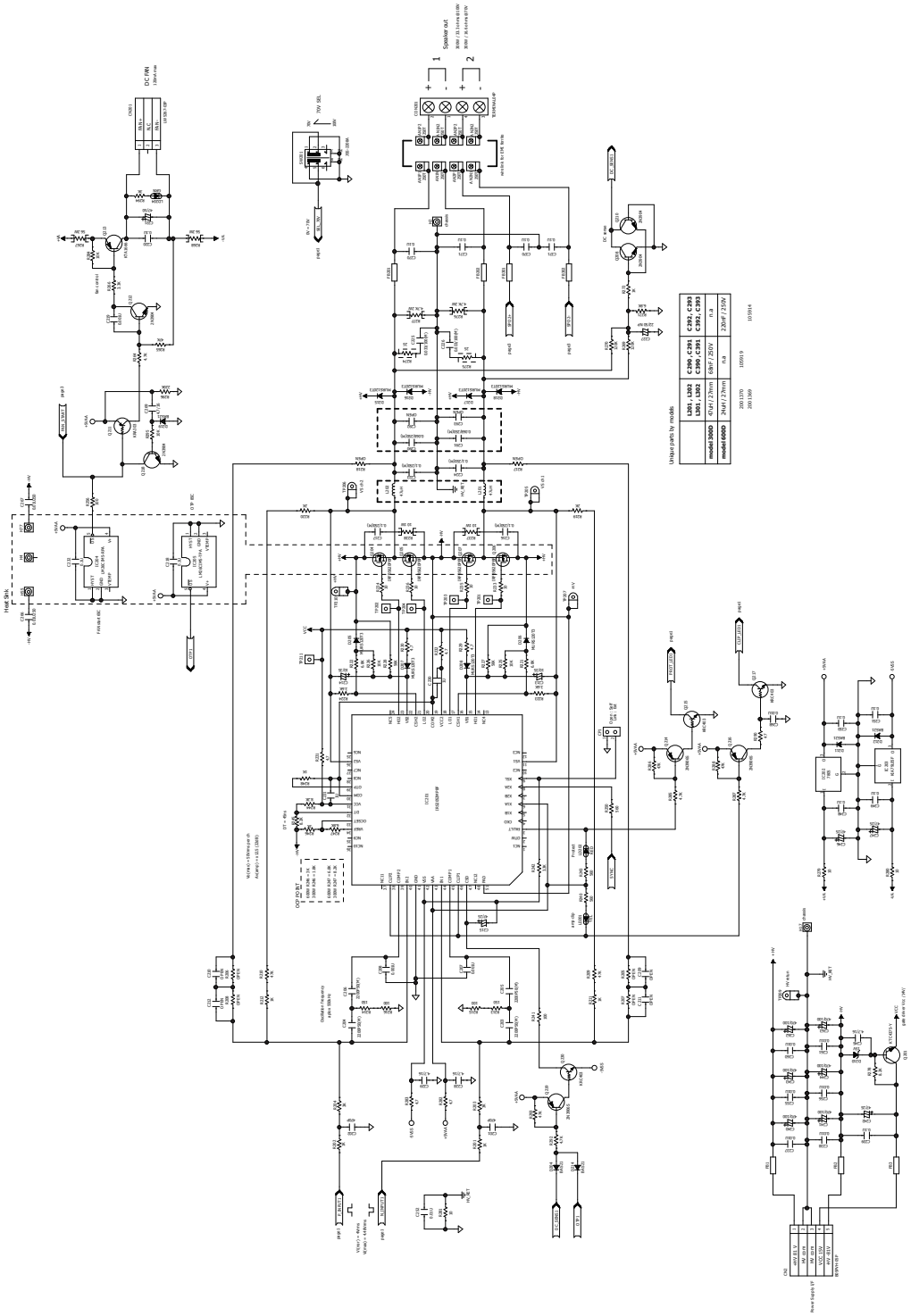

DPA-300D AMP

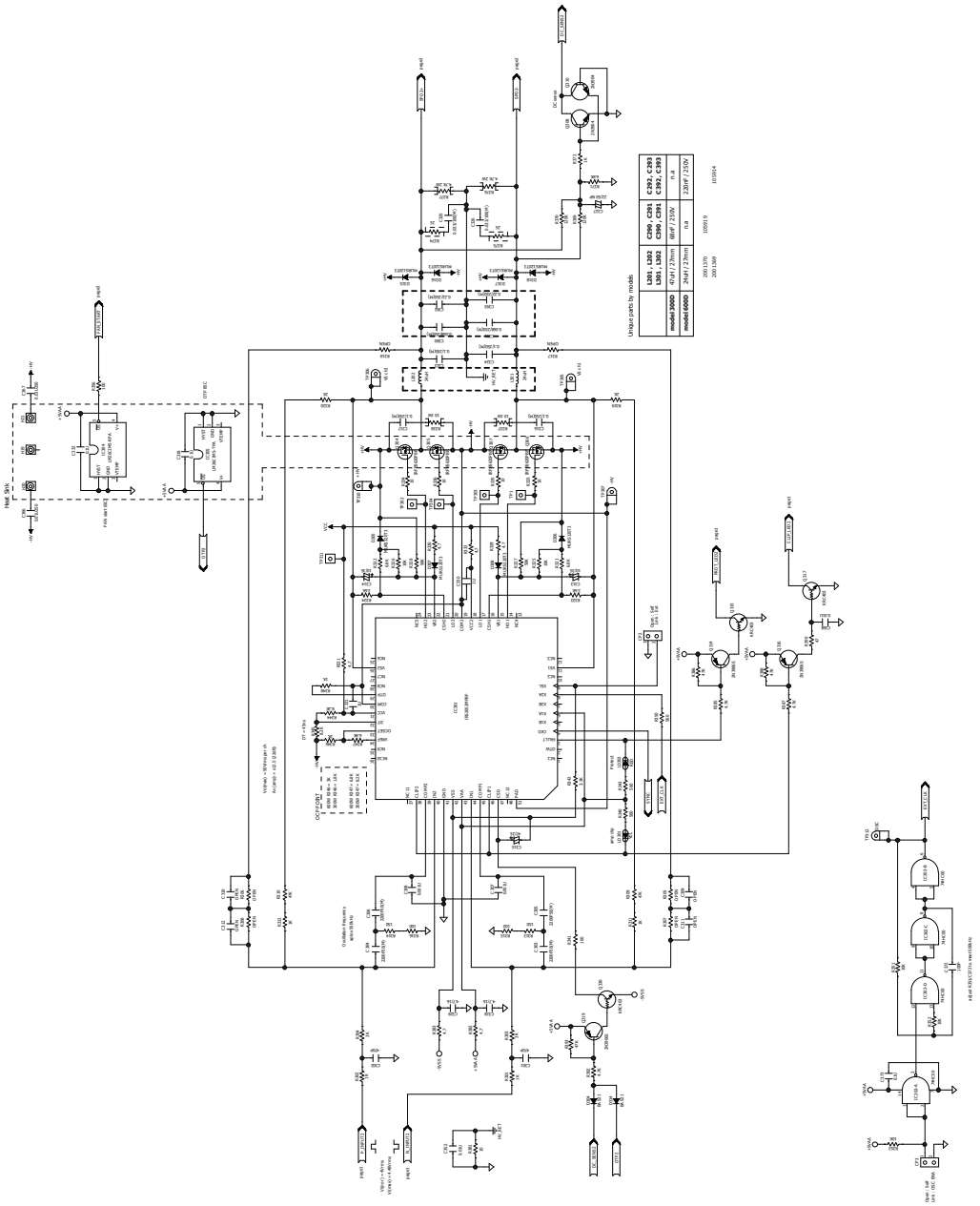

SCHEMATIC DIAGRAM

DPA-300D FRONT

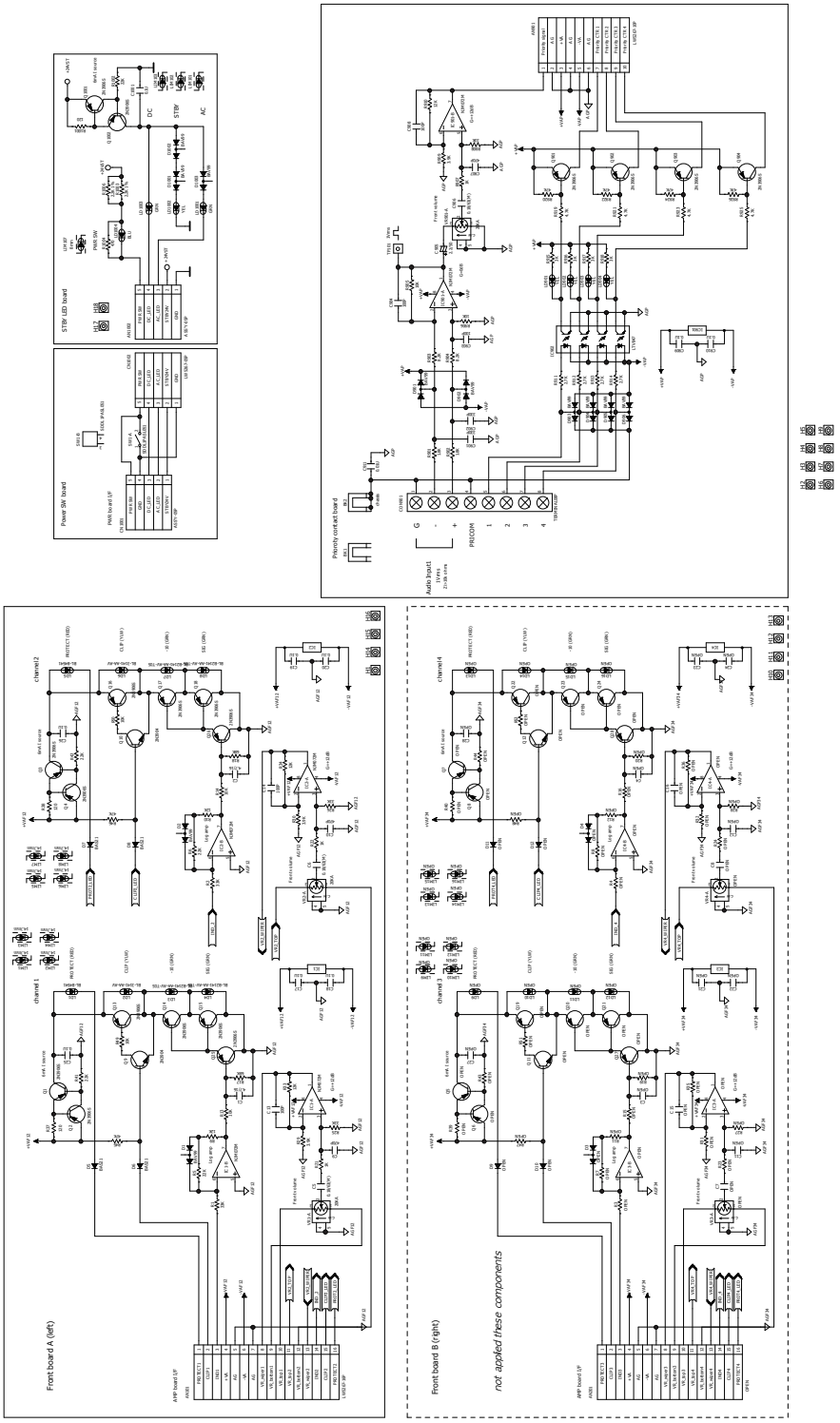

DPA-300D SMPS

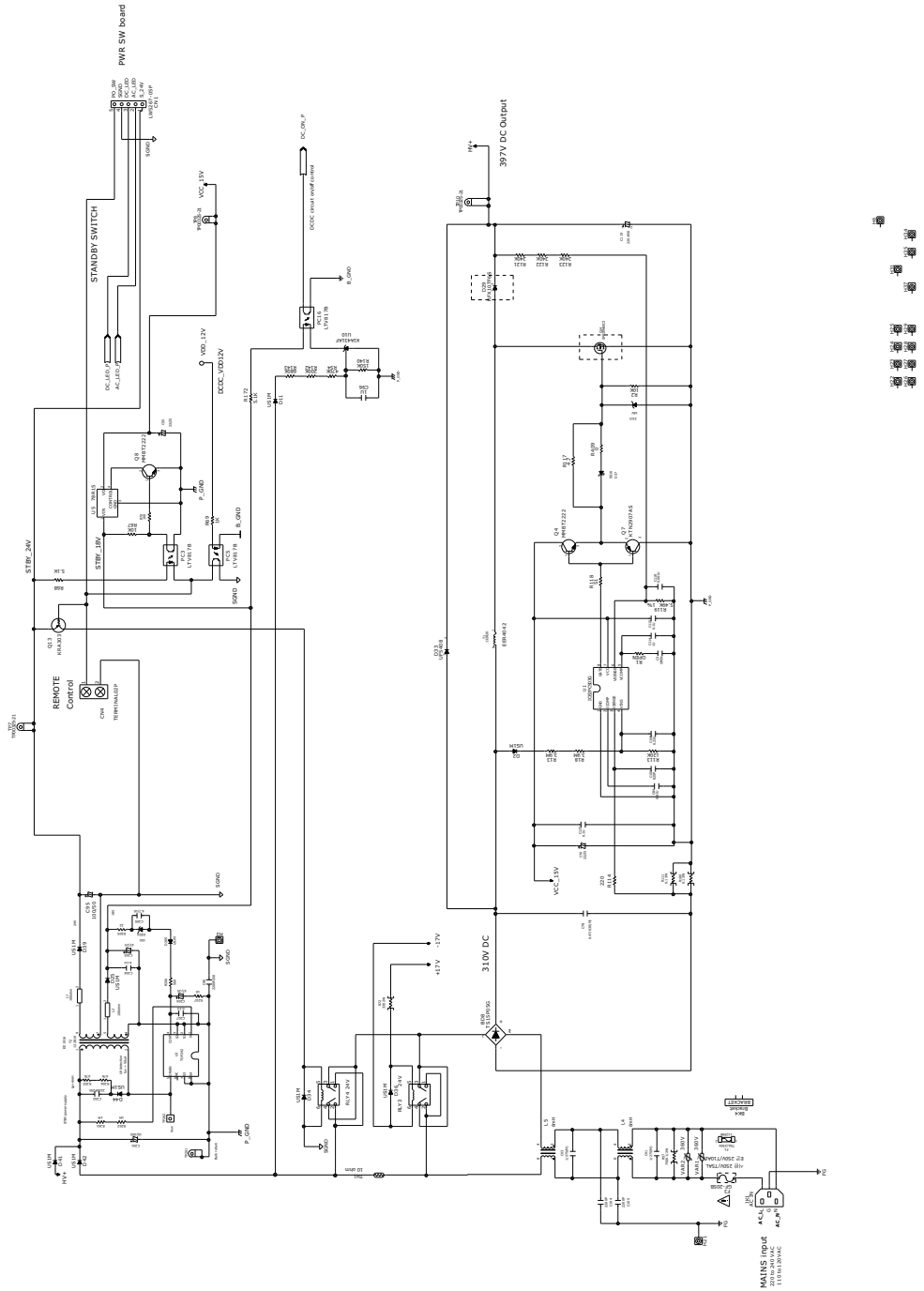

SCHEMATIC DIAGRAM

DPA-300D SMPS

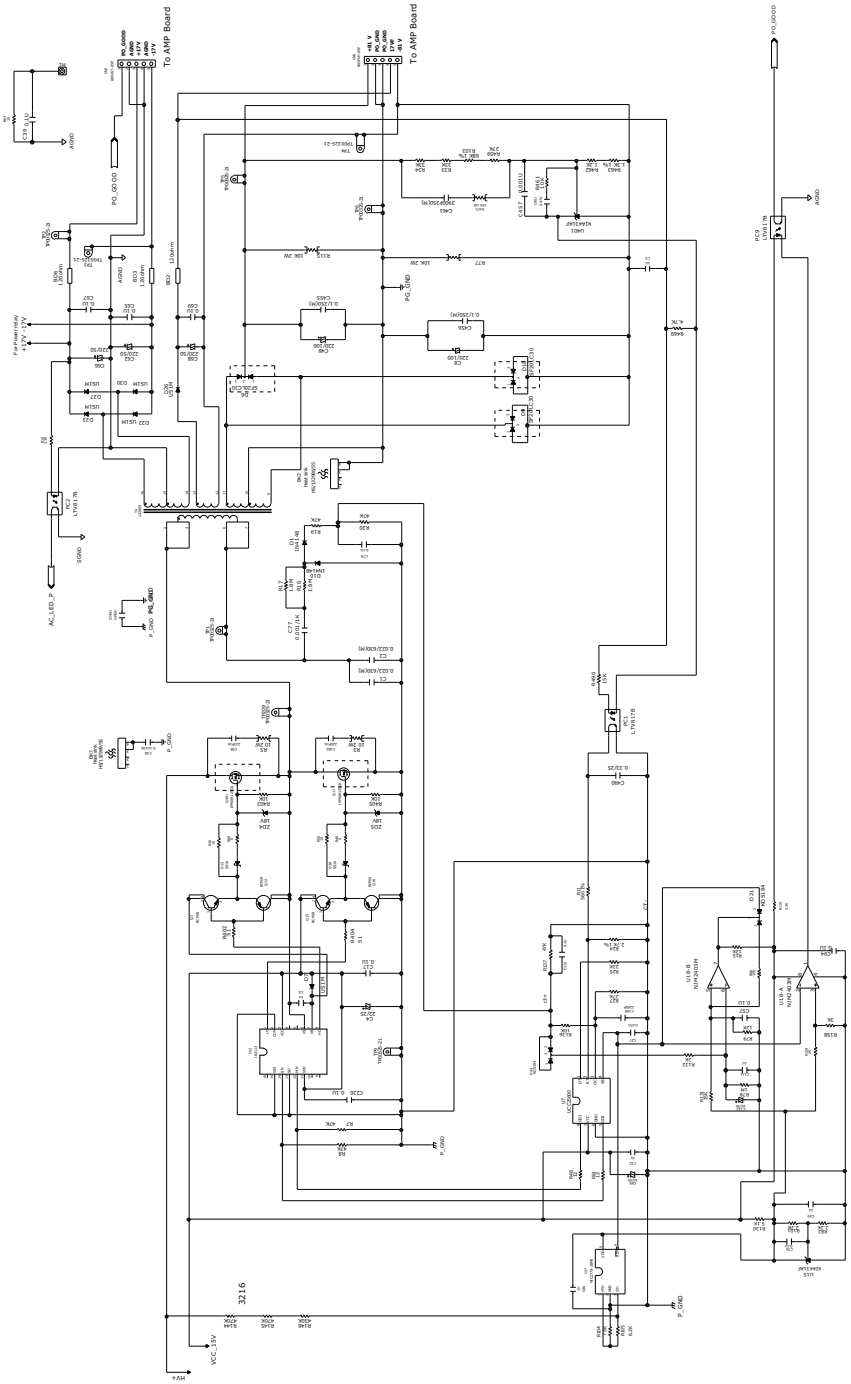

DPA-300D SMPS

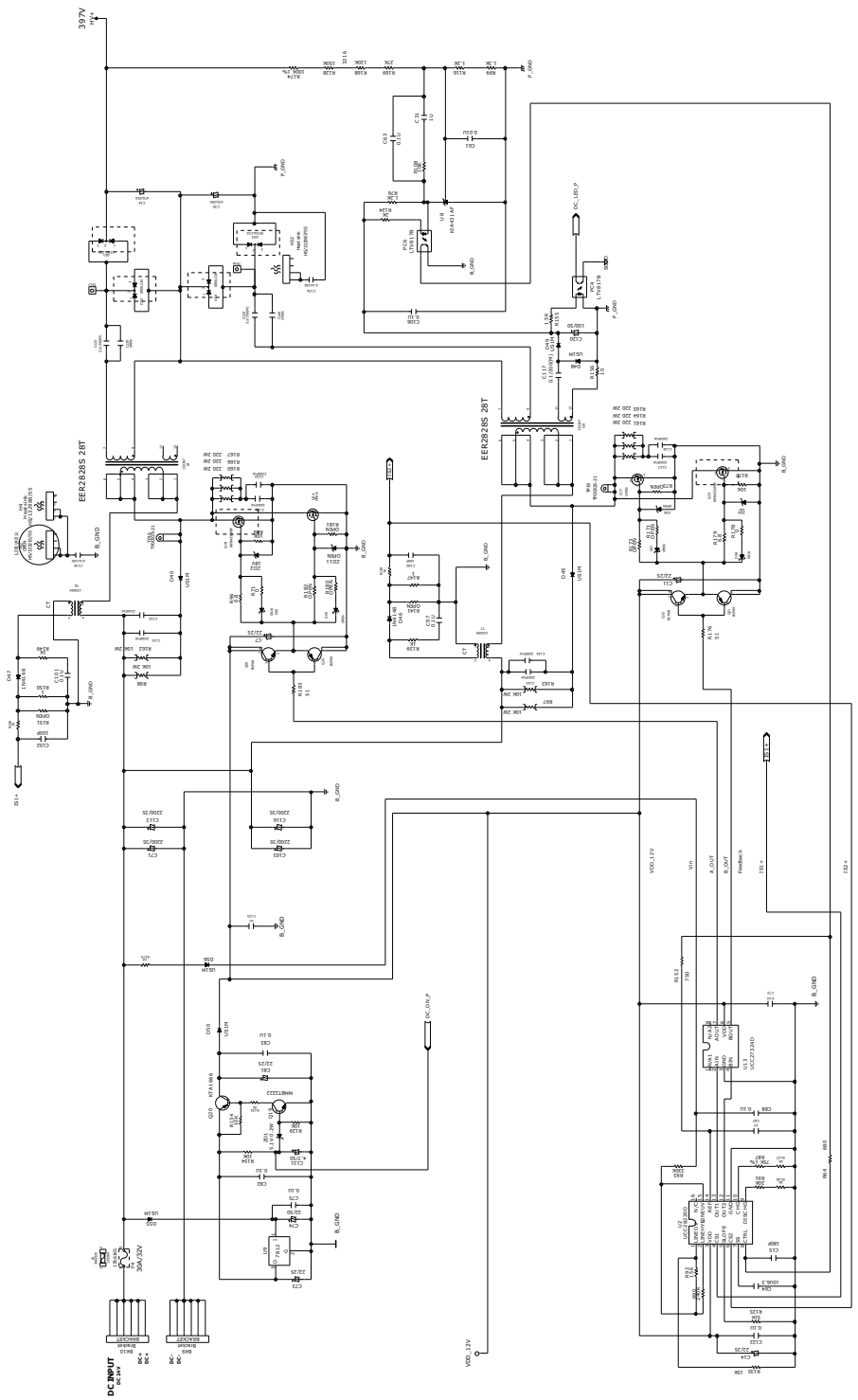

SCHEMATIC DIAGRAM

DPA-600D AMP

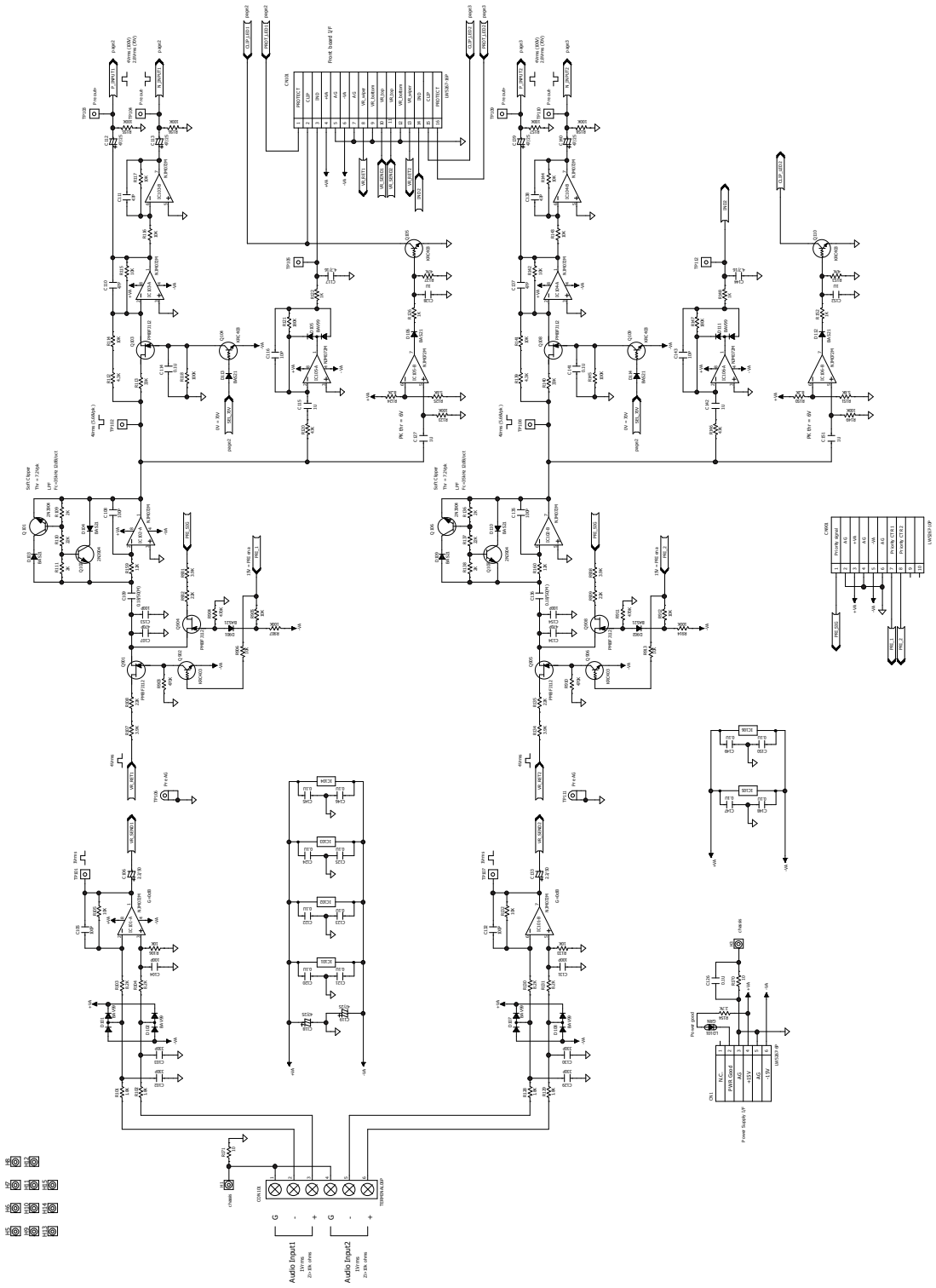

SCHEMATIC DIAGRAM

DPA-600D AMP

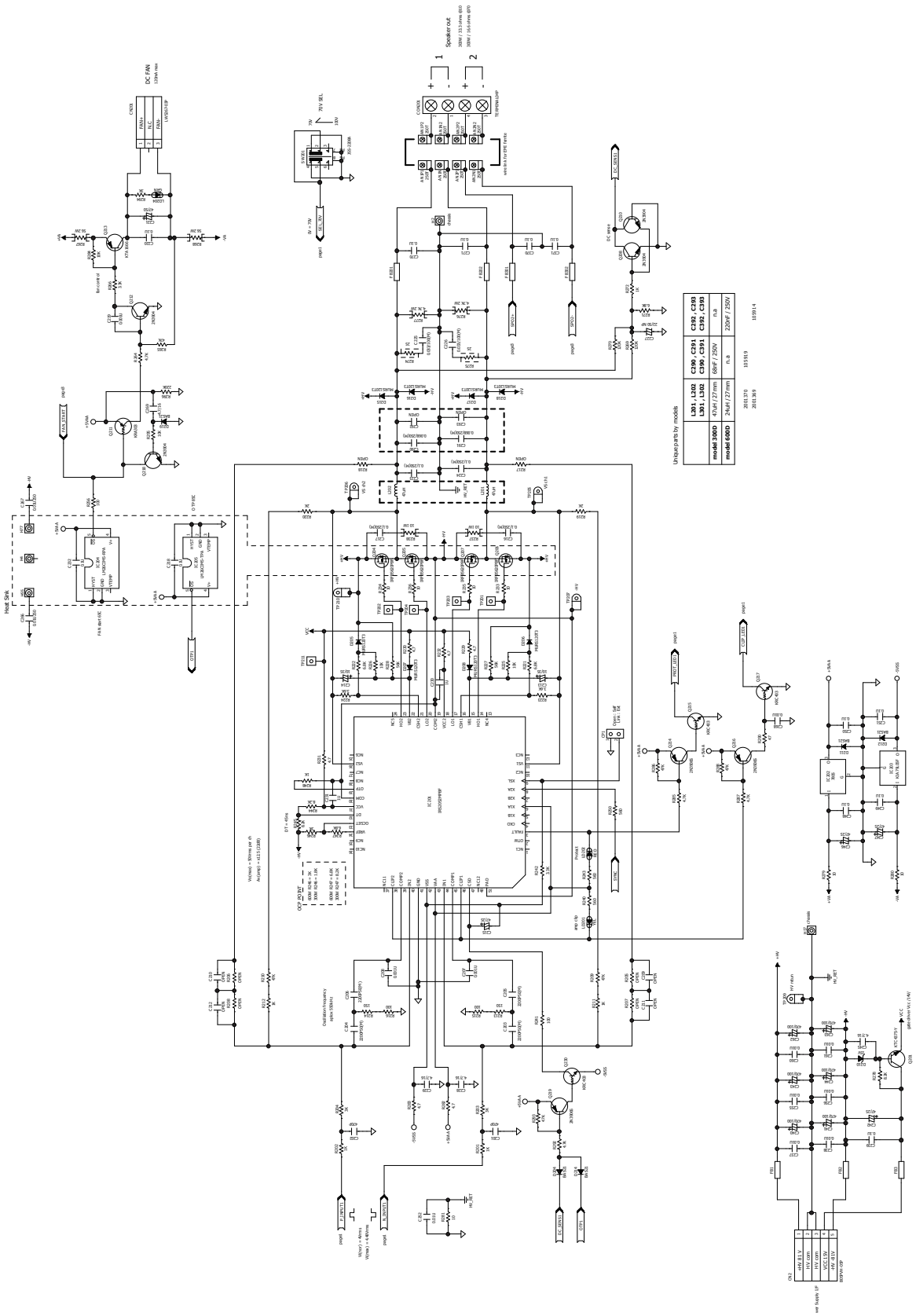

SCHEMATIC DIAGRAM

DPA-600D AMP

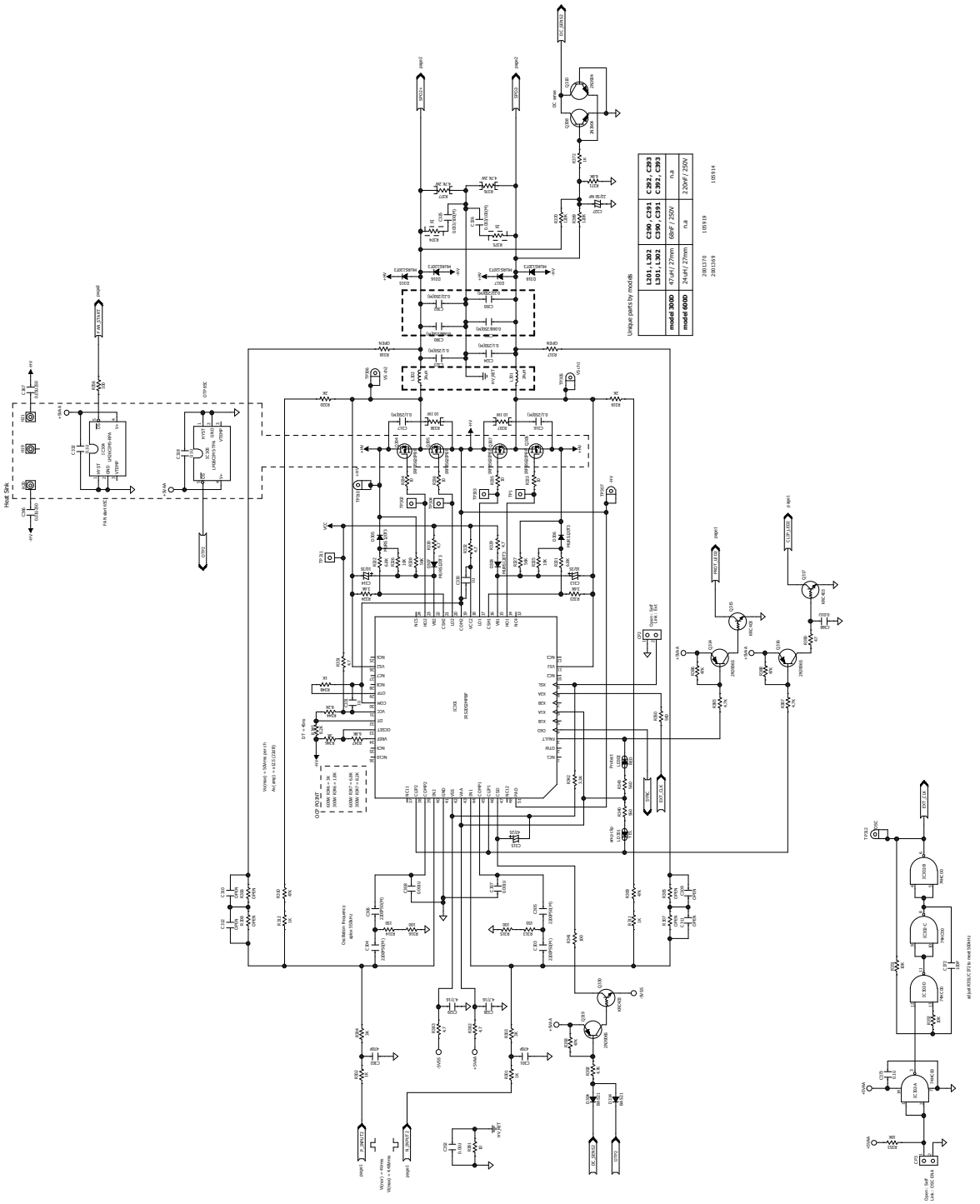

DPA-600D FRONT

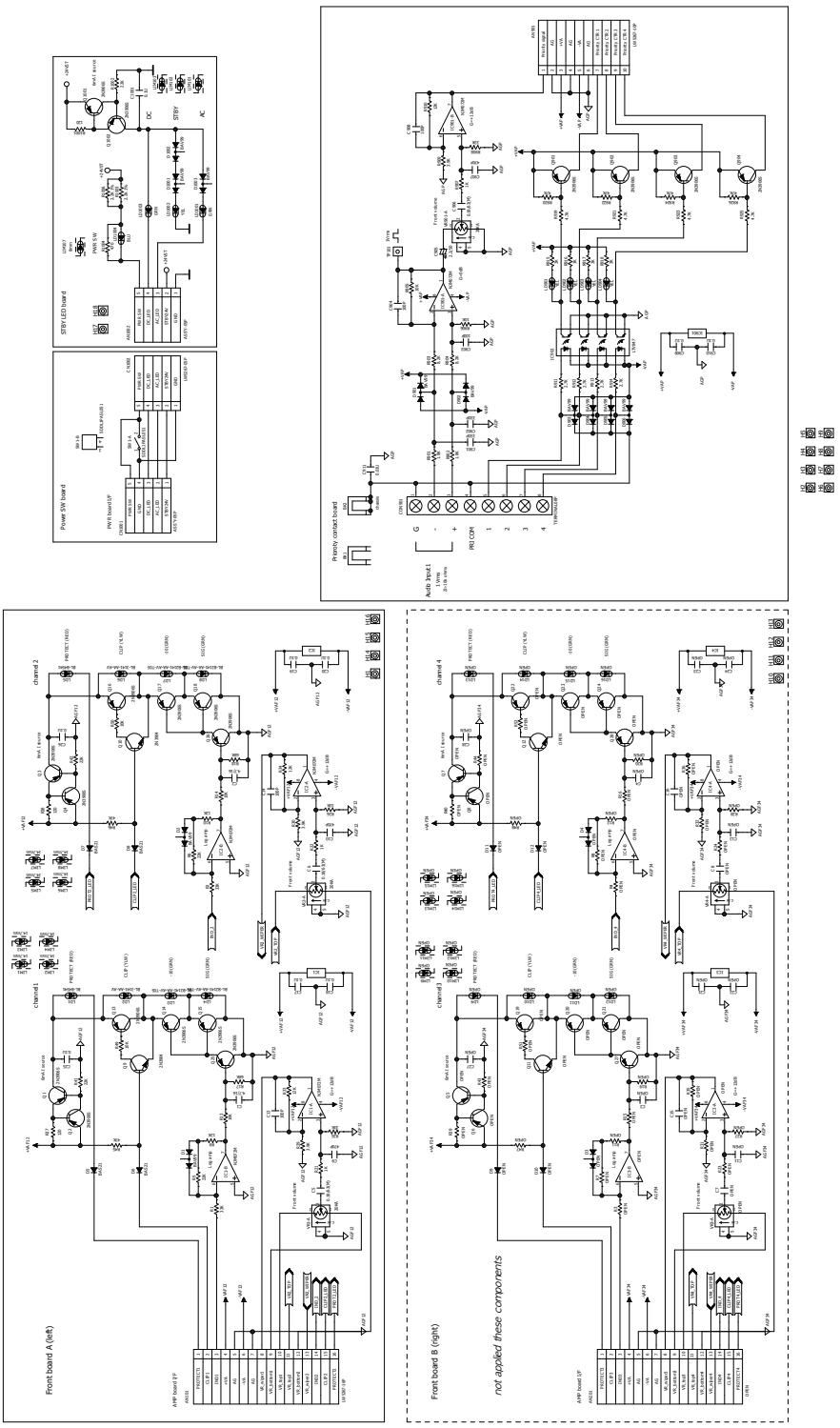

SCHEMATIC DIAGRAM

DPA-600D FRONT

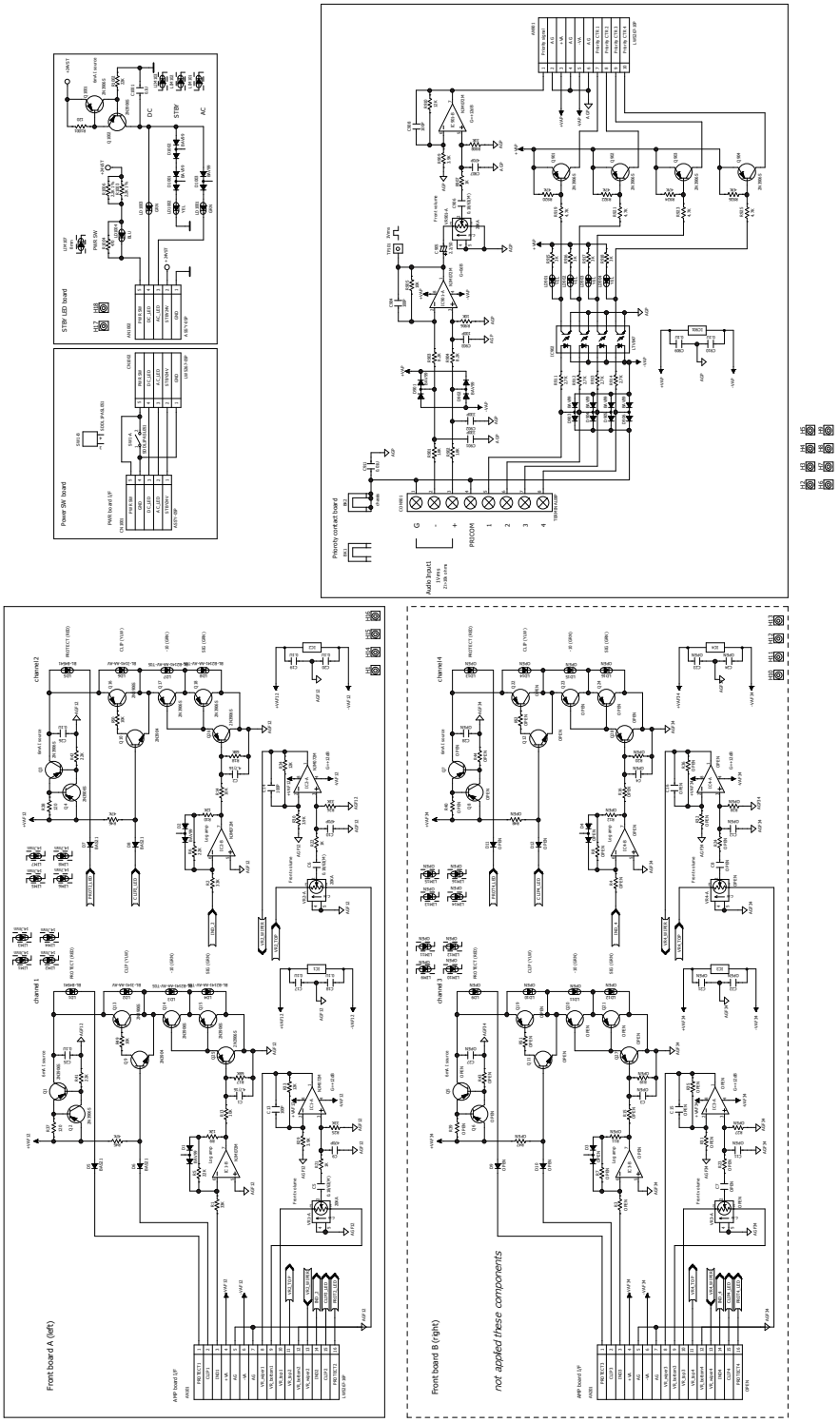

DPA-600D FRONT

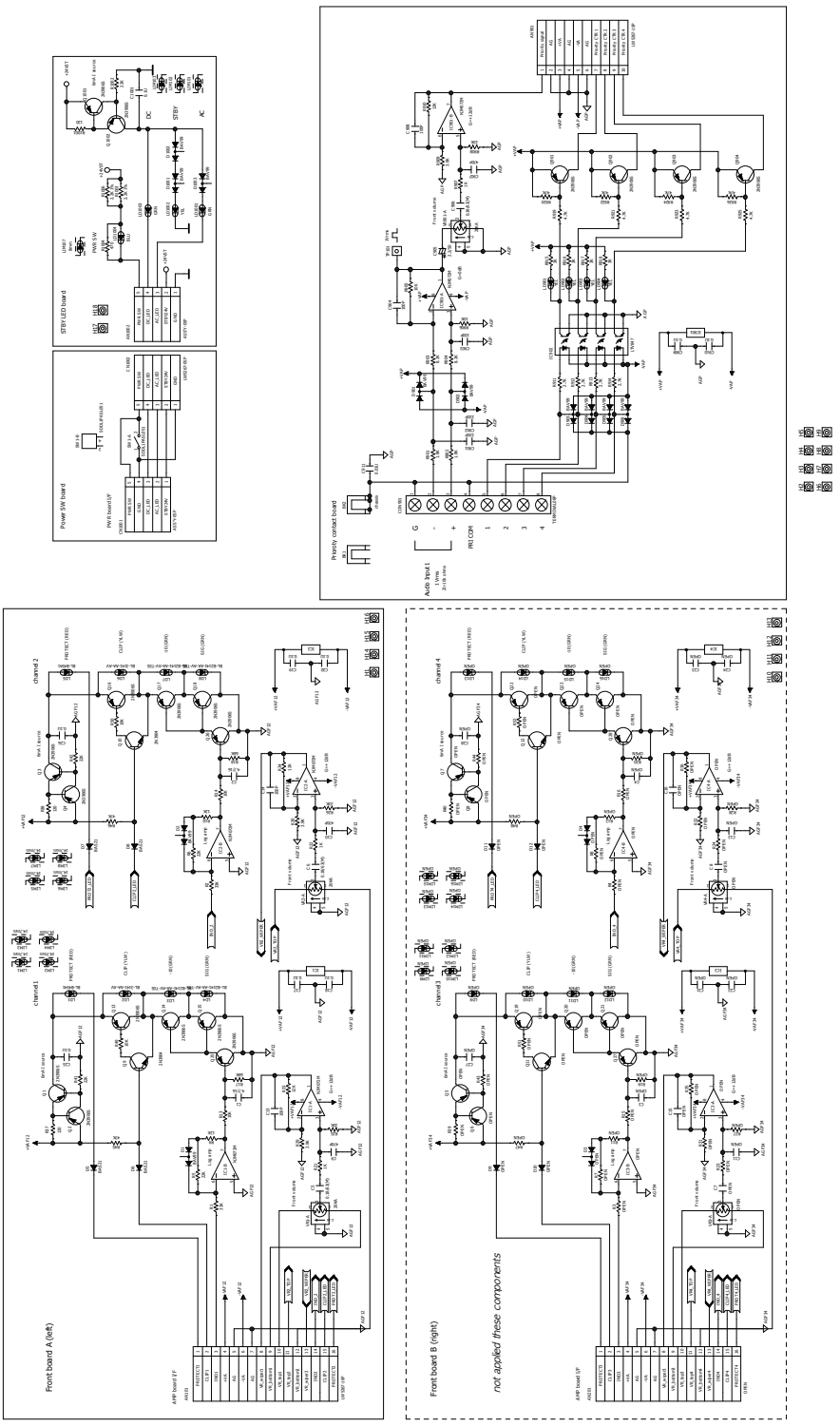

SCHEMATIC DIAGRAM

DPA-600D FRONT

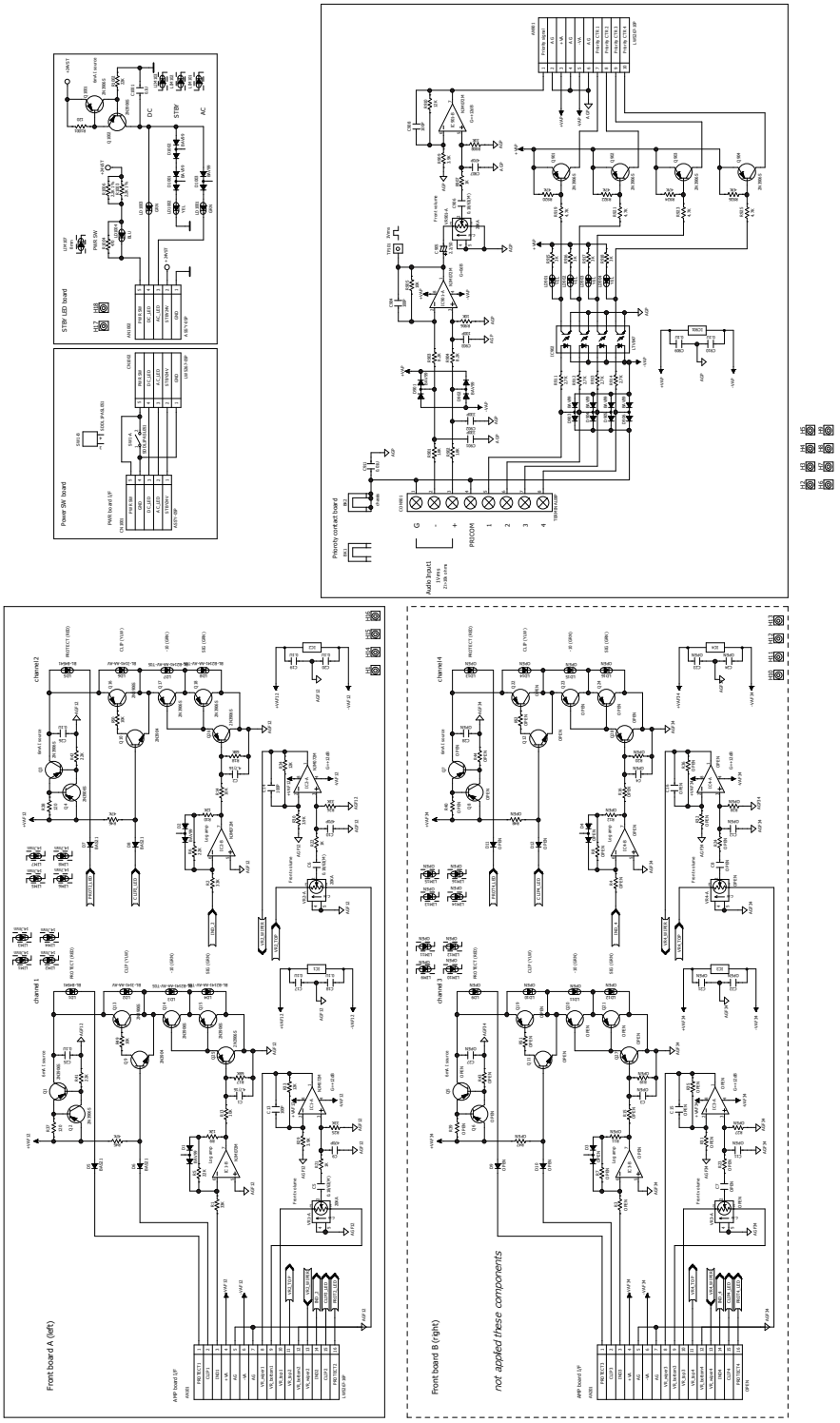

DPA-600D SMPS

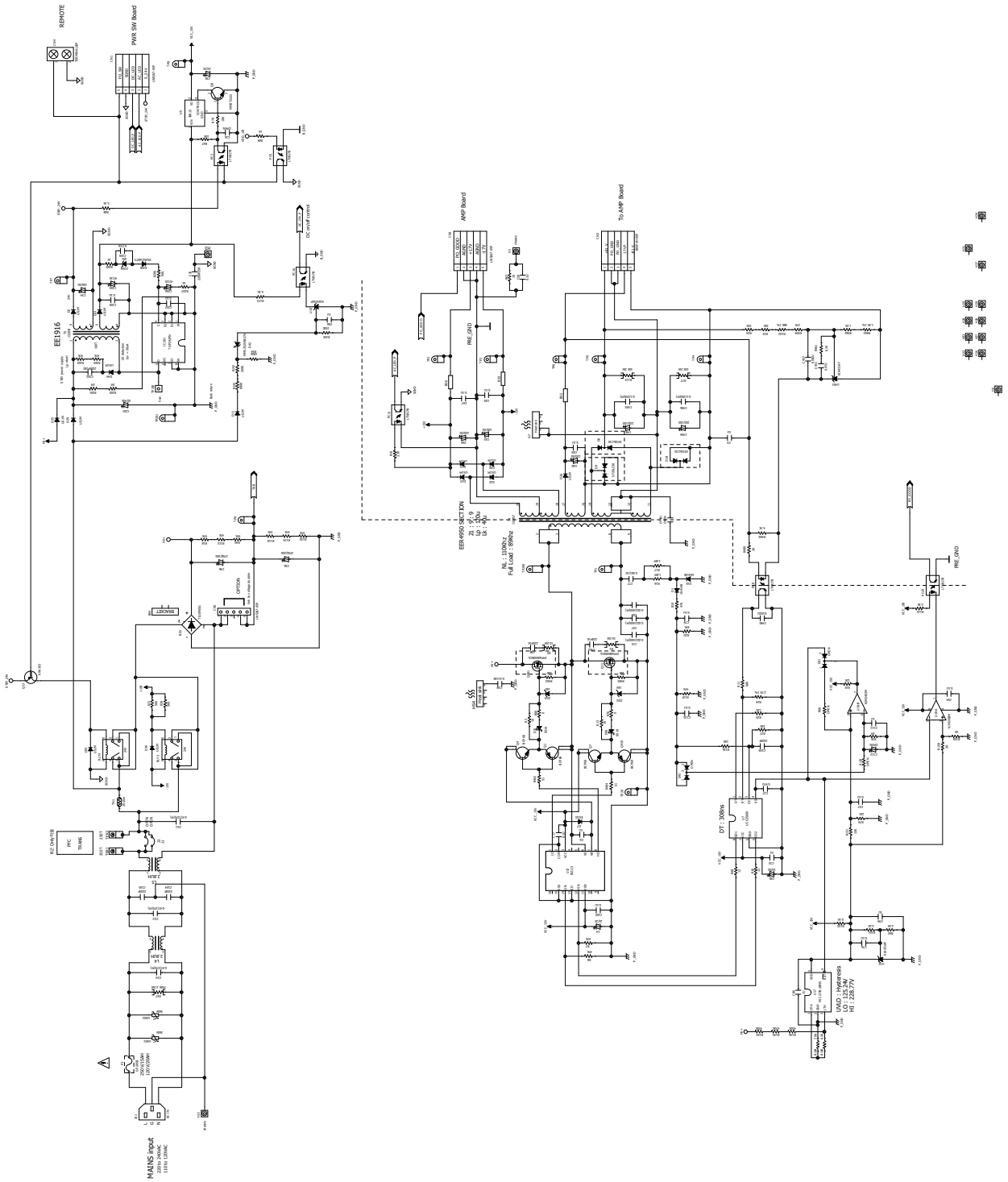

SCHEMATIC DIAGRAM

DPA-600D SMPS

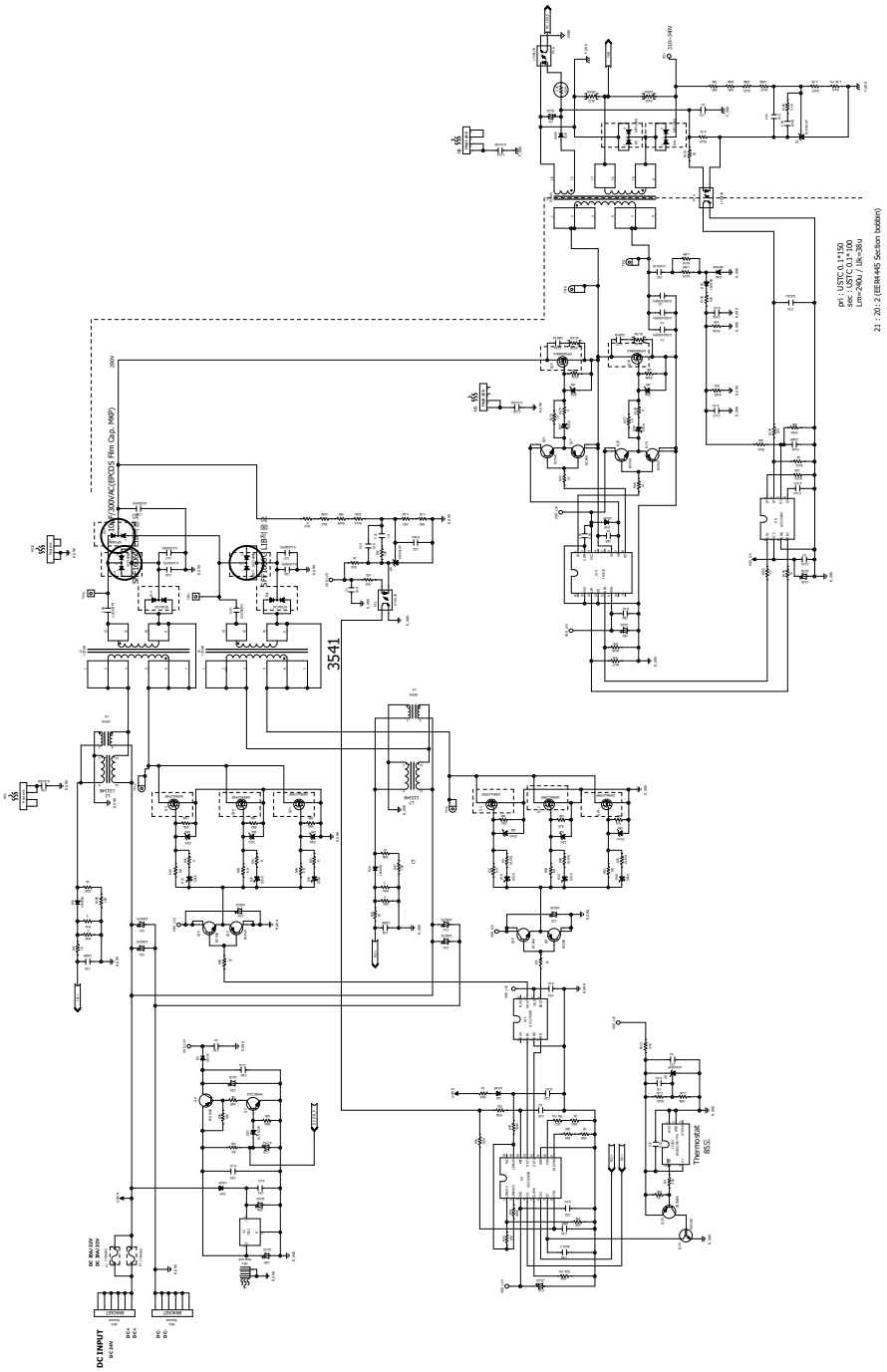

WIRING DIAGRAM

DPA-300D

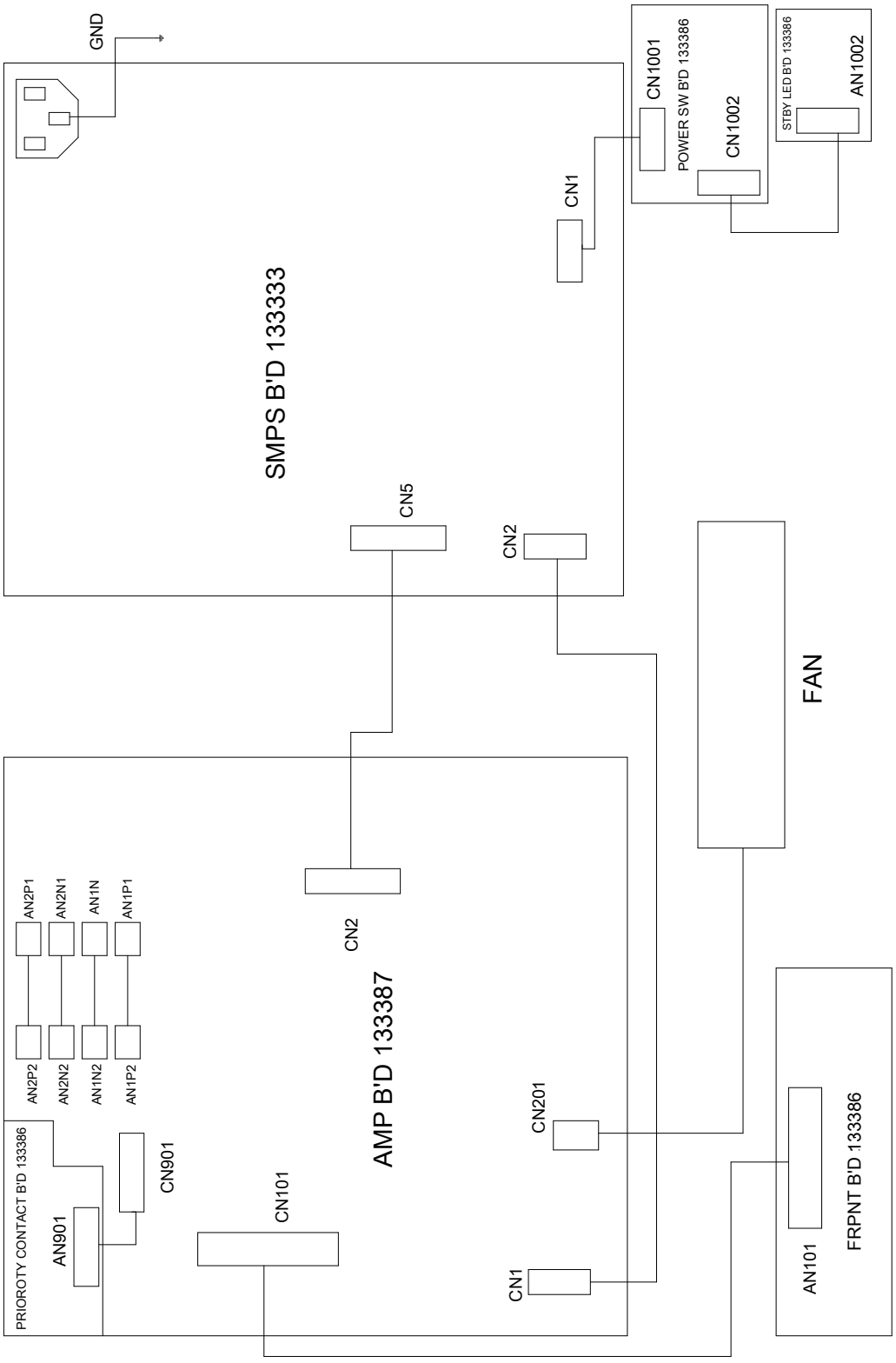

WIRING DIAGRAM

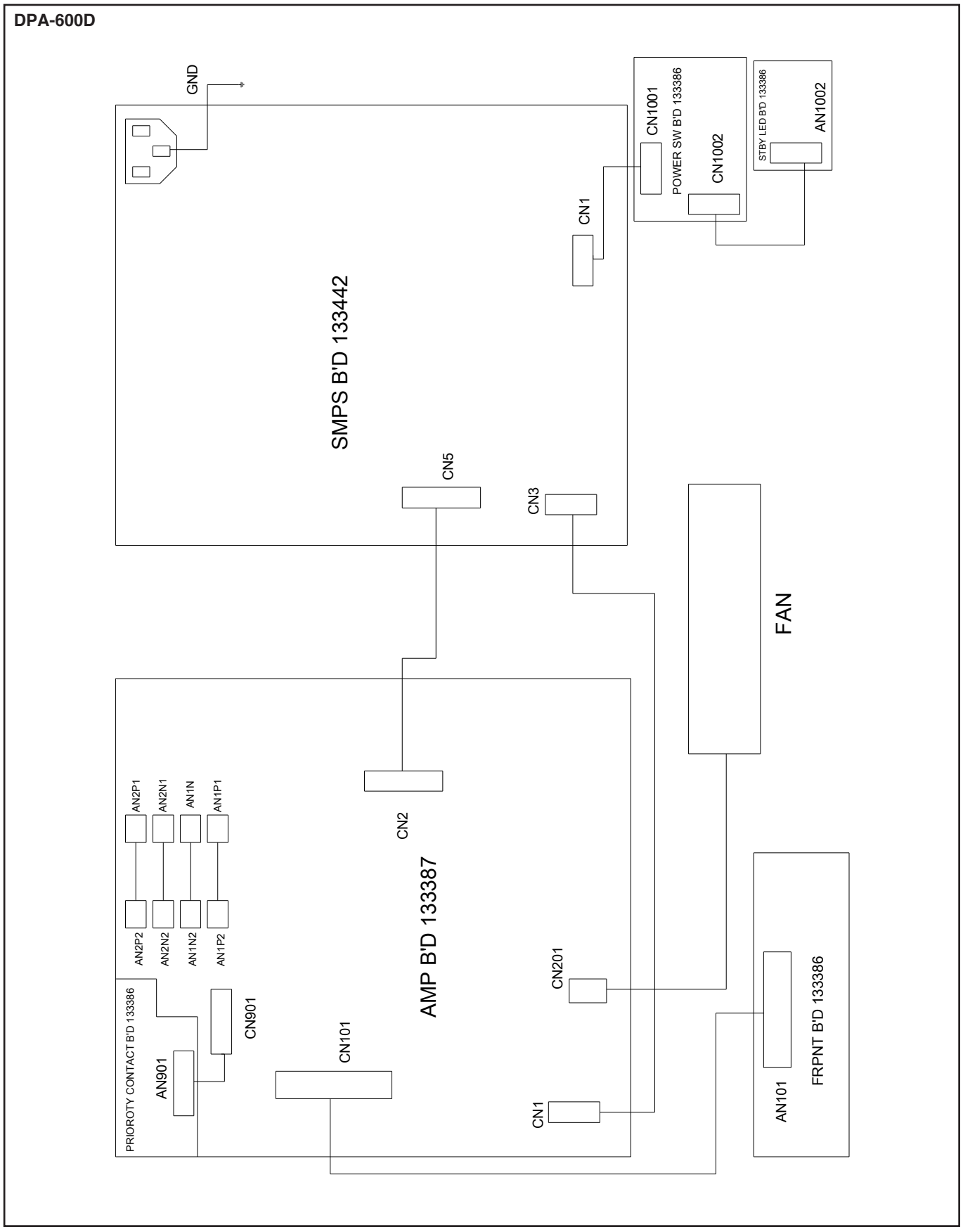

NOTE

EXPLODED VIEW OF CABINET &
CHASSIS/MECHANICAL PARTS LIST

DPA-300D

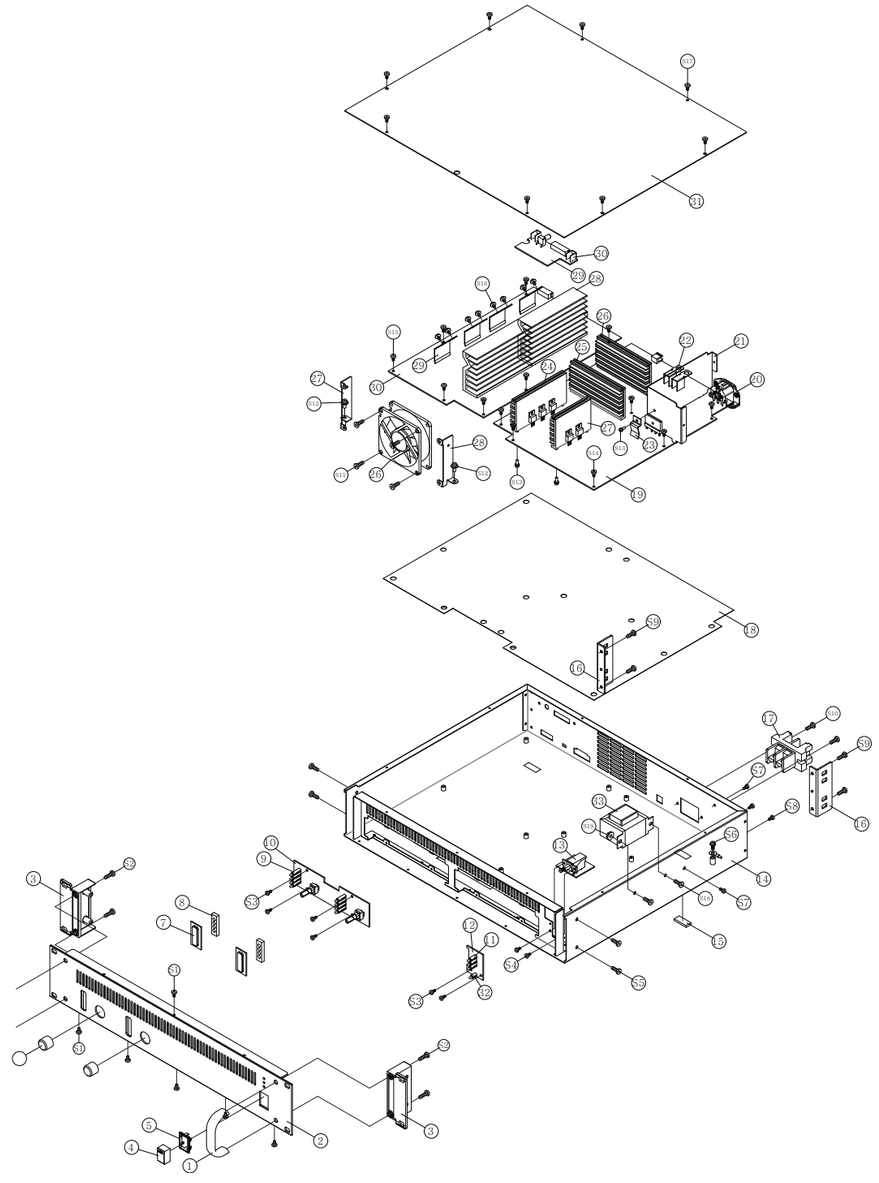

EXPLODE VIEW_DPA-300D (R)

NO	PART NAME	PART NUMBER	Q'TY	REMARKS
S19	NUT FLANG M4	114595	2	
S18	SCREW BM 4X8BK	114292	2	
S17	SCREW 3BTC 3X6B	114487	8	
S16	SCREW ASS'Y PM 4X8N	114412	4	
S15	SCREW BM 3X6N	114281	4	
S14	SCREW BM 3X6N	114281	8	
S13	ASS'Y SCREW PM 3X12N	130772	11	
S12	SCREW ASS'Y PM 4X8N	114412	2	
S11	SCREW BM 4X8BK	114292	4	
S10	SCREW 3BTC 4X14B	114501	2	
S9	SCREW 3BTC 4X8BK	114497	4	
S8	SCREW BM 3X6B	114280	2	
S7	SCREW 2BTC 3X8B	114465	2	
S6	SCREW WSAM 4X6N	114567	1	
S5	SCREW 2BTC 4X12B	114477	4	
S4	SCREW BM 3X6N	114281	2	
S3	SCREW 2BTC 3X8B	114465	4	
S2	SCREW BM 4X12B	114297	4	
S1	SCREW 3BTC 3X6B	114487	6	
35				
34				
33	TRANS		1	
32	LED LIMITER	114985	1	(H=8mm)
31	TOP COVER	100469	1	
30	BRACKET PCB	113528	2	
29	PRIORITY B'D		1	
28	BKT FAN "R"	113303	1	
27	FAN BKT "L"	113302	1	
26	FAN		1	
25	AMP B'D		1	
24	TR BKT	132433	2	
23	TR BKT	113431	1	
22	AC BKT	132374	2	
21	SHIELD COVER	132373	1	
20	AC INLET		1	
19	SMPS B'D		1	
18	INSULATION SHEET	133409	1	
17	AC TERMINAL		1	
16	B.K.T(Q-1000,COM)	100798	2	
15	FOOT	114114	2	
14	MAIN CHASSIS (DPA-300D)	132347	1	
13	POWER SW B'D		1	
12	STBY B'D		1	
11	LED LIMITER	114982	3	(H=11.5mm)
10	FRONT B'D		1	
9	LED LIMITER	114983	8	(H=14.7mm)
8	LED SPONGE	132370	2	
7	LED LENS	132369	2	
6	VR KNOB	124749	2	
5	BEZZEL PUSH	114705	1	
4	PUSH KNOB	114868	1	
3	GUIDE HANDLE	114879	2	
2	PANEL FRONT (DPA-300D)	2001318	1	
1	HANDLE,2U,BLACK	127710	2	

EXPLODED VIEW OF CABINET &
CHASSIS/MECHANICAL PARTS LIST

DPA-600D

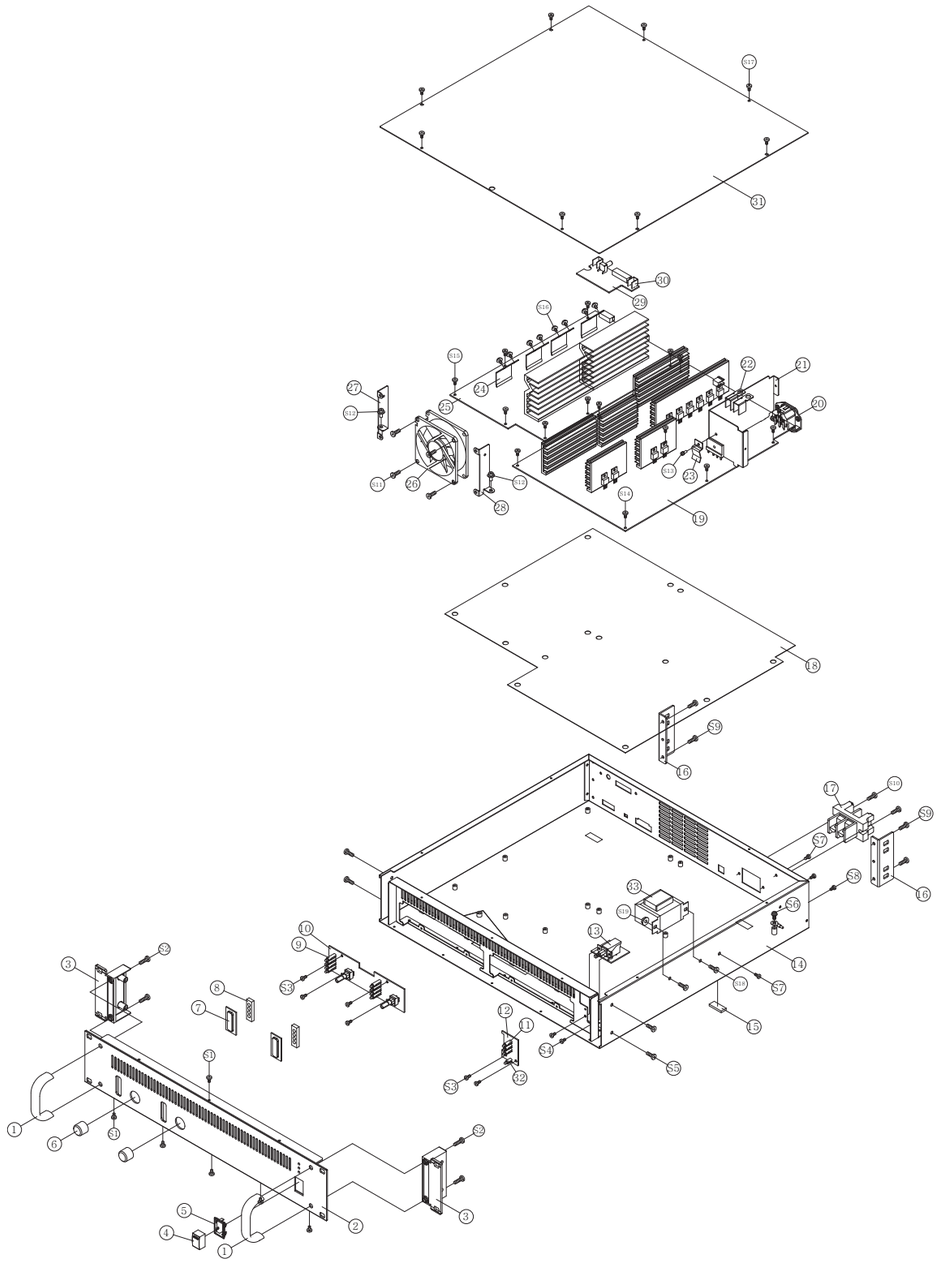

EXPLODE VIEW_DPA-600D (R)

NO	PART NAME	PART NUMBER	Q'TY	REMARKS
S19	NUT FLANG M4	114595	2	
S18	SCREW BM 4X8BK	114292	2	
S17	SCREW 3BTC 3X6B	114487	8	
S16	SCREW ASS'Y PM 4X8N	114412	4	
S15	SCREW BM 3X6N	114281	4	
S14	SCREW BM 3X6N	114281	8	
S13	ASS'Y SCREW PM 3X12N	130772	11	
S12	SCREW ASS'Y PM 4X8N	114412	2	
S11	SCREW BM 4X8BK	114292	4	
S10	SCREW 3BTC 4X14B	114501	2	
S9	SCREW 3BTC 4X8BK	114497	4	
S8	SCREW BM 3X6B	114280	2	
S7	SCREW 2BTC 3X8B	114465	2	
S6	SCREW WSAM 4X6N	114567	1	
S5	SCREW 2BTC 4X12B	114477	4	
S4	SCREW BM 3X6N	114281	2	
S3	SCREW 2BTC 3X8B	114465	4	
S2	SCREW BM 4X12B	114297	4	
S1	SCREW 3BTC 3X6B	114487	6	
35				
34				
33	TRANS		1	
32	LED LIMITER	114985	1	(H=8mm)
31	TOP COVER	100469	1	
30	BRACKET PCB	113528	2	
29	PRIORITY B'D		1	
28	BKT FAN "R"	113303	1	
27	FAN BKT "L"	113302	1	
26	FAN		1	
25	AMP B'D		1	
24	TR BKT	132433	4	
23	TR BKT	113431	1	
22	AC BKT	132374	2	
21	SHIELD COVER	132373	1	
20	AC INLET		1	
19	SMPS B'D		1	
18	INSULATION SHEET	133411	1	
17	AC TERMINAL		1	
16	B.K.T(Q-1000.COM)	100798	2	
15	FOOT	114114	2	
14	MAIN CHASSIS (DPA-600D)	132348	1	
13	POWER SW B'D		1	
12	STBY B'D		1	
11	LED LIMITER	114982	3	(H=11.5mm)
10	FRONT B'D		1	
9	LED LIMITER	114983	8	(H=14.7mm)
8	LED SPONGE	132370	2	
7	LED LENS	132369	2	
6	VR KNOB	124749	2	
5	BEZZEL PUSH	114705	1	
4	PUSH KNOB	114868	1	
3	GUIDE HANDLE	114879	2	
2	PANEL FRONT (DPA-600D)	2001319	1	
1	HANDLE,2U,BLACK	127710	2	

www.inter-m.com
MADE IN KOREA
2014. 1